# L04E
**AA**

Service
Service
**Service**

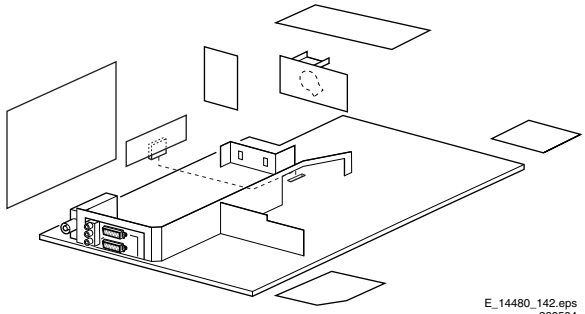

E_14480_142.eps
260504

# Service Manual

**Contents** **Page**


1. Technical Specifications, Connections, and Chassis Overview 2
2. Safety and Maintenance Instructions, Warnings, and Notes 4
3. Directions for Use 6
4. Mechanical Instructions 7
5. Service Modes, Error Codes, and Faultfinding 9
6. *Block Diagrams, Testpoint Overviews, and Waveforms*
   - Wiring Diagram 19
   - Block Diagram Supply and Deflection 20
   - Testpoint Overview Mono Carrier 21
   - Block Diagram Video 22
   - Testpoint Overview CRT, LTI & PIP Panel 23
   - Block Diagram Audio/Control 24
   - I2C and Supply Voltage Overview 25
7. *Circuit Diagrams and PWB Layouts* *Diagram* *PWB*
   - Power Supply (Diagram A1) 26 38-43
   - Diversity Table for A1 (Power Supply) 27 38-43
   - Deflection (Diagram A2) 28 38-43
   - Diversity Table for A2 (Deflection) 29 38-43
   - Tuner IF (Diagram A3) 30 38-43
   - Hercules (Diagram A4) 31 38-43
   - Features & Connectivities (Diagram A5) 32 38-43
   - Class D - Audio Amplifier (Diagram A6) 33 38-43
   - Audio Amplifier (Diagram A7) 34 38-43
   - Rear I/O Scart (Diagram A8) 35 38-43
   - Front Control (Diagram A9) 36 38-43
   - DVD Power Supply (Diagram A10) 37 38-43
   - CRT Panel (Diagram B1) 44 46-47
   - ECO Scavem Panel (Diagram B2) 45 46-47
   - Side AV + HP Panel (PV2) (Diagram D) 48 49
   - Side AV + HP Panel (FL-13) (Diagram D) 50 51
   - Top Control Panel (PV2) (Diagram E) 52 52


**Contents** **Page**


   - Top Control Panel (FL-13) (Diagram E) 53 53
   - Power Supply PIP Panel (Diagram F1) 54 56-57
   - Tuner IF and Demodulator PIP (Diagram F2) 55 56-57
   - Linearity & Panorama Panel (Diagram G) 58 58
   - LTI/CTI Interface Panel (Diagram H) 59 60
   - Front Interface Panel (FL-13) (Diagram J) 61 61
   - Front Interface Panel (PV2) (Diagram J) 62 62
   - Front Interface and Keyb. Panel (Diagram J) 63 64
8. Alignments 65
9. Circuit Descriptions 73
   - Abbreviation List 82
   - IC Data Sheets 84
10. Spare Parts List 86
11. Revision List 90


©Copyright 2004 Philips Consumer Electronics B.V. Eindhoven, The Netherlands.
All rights reserved. No part of this publication may be reproduced, stored in a retrieval system or transmitted, in any form or by any means, electronic, mechanical, photocopying, or otherwise without the prior permission of Philips.

Published by BB 0466 Service PaCE Printed in the Netherlands Subject to modification EN 3122 785 14480

PHILIPS

# 1. Technical Specifications, Connections, and Chassis Overview

**Notes:**
- Described specifications are valid for the *whole* product range.
- Figures below can deviate slightly from the actual situation, due to different set executions.

## 1.1 Technical Specifications

### 1.1.1 Vision

| | | |
|---|---|---|
| Display type | : | DV-CRT-RF |
| | : | DV-CRT-FSQ |
| | : | DV-CRT-SF |
| Screen size | : | 21” (55 cm), 4:3 |
| | : | 24” (61 cm), 16:9 |
| | : | 25” (63 cm), 4:3 |
| | : | 28” (70 cm), 4:3 |
| | : | 29” (72 cm), 4:3 |
| | : | 32” (82 cm), 16:9 |
| Tuning system | : | PLL |
| TV Colour systems | : | PAL B/G, B/H, D/K, I |
| | : | SECAM |
| | : | SECAM B/G, D/K, L/L' |
| Video playback | : | NTSC |
| Channel selections | : | 100 presets |
| | : | UVSH |
| Aerial input | : | 75 ohm, Coax |
| | : | IEC-type |

### 1.1.2 Sound

| | | |
|---|---|---|
| Sound systems | : | NICAM Stereo |
| Maximum power | : | 2x10/ 2x5 W_rms (int.) |

### 1.1.3 Miscellaneous

| | | |
|---|---|---|
| Power supply: | | |
| - Mains voltage | : | 220 - 240 V_ac |
| - Mains frequency | : | 50/60 Hz |
| Ambient conditions: | | |
| - Temperature range | : | +5 to +40 deg. C |
| - Maximum humidity | : | 90 % R.H. |
| Power consumption | | |
| - Normal operation | : | from 60 W (21”) |
| | : | to 91 W (32”) |
| - Standby | : | < 1 W |

## 1.2 Connections

**Note:** The following connector colour abbreviations are used (acc. to DIN/IEC 757): Bk= Black, Bu= Blue, Gn= Green, Gy= Grey, Rd= Red, Wh= White, Ye= Yellow.

### 1.2.1 Side Connections

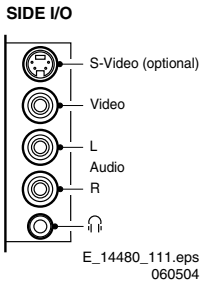


**Figure 1-1 Side I/O**

***SVHS: Y/C - In (Hosiden) (optional)***

| | | | |
|---|---|---|---|
| 1 | - Ground | Gnd | ⏚ |
| 2 | - Ground | Gnd | ⏚ |
| 3 | - Y | 1 V_pp / 75 ohm | ⊖ |
| 4 | - C | 0.3 V_pp / 75 ohm | ⊖ |

***Audio / Video In***

| | | | |
|---|---|---|---|
| Ye | - Video (CVBS) | 1 V_pp / 75 ohm | ⊖◎ |
| Wh | - Audio - L | 0.5 V_rms / 10 kohm | ⊖◎ |
| Rd | - Audio - R | 0.5 V_rms / 10 kohm | ⊖◎ |
| Bk | - Headphone | 8 - 600 Ohm / 4 mW | ◎/🎧 |

### 1.2.2 Rear Connections

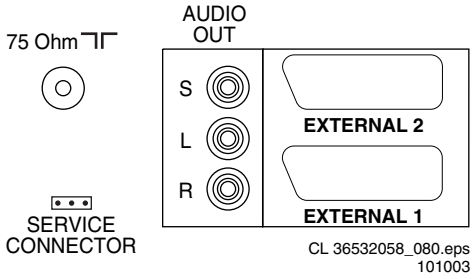


**Figure 1-2 Rear connections**

***Aerial In***

| | | |
|---|---|---|
| - F-type | Coax, 75 ohm | ⊓ |

***Audio Out***

| | | | |
|---|---|---|---|
| 1 | - Subwoofer | Var. level (optional) | ⊖◎ |
| Wh | - Audio - L | 0.5 V_rms / 1 kohm | ⊖◎ |
| Rd | - Audio - R | 0.5 V_rms / 1 kohm | ⊖◎ |

***External 1: RGB/YUV - In and CVBS - In/Out***

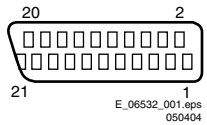


**Figure 1-3 SCART connector**

| | | | |
|---|---|---|---|
| 1 | - Audio - R | 0.5 V_rms / 1 kohm | ⊖→ |
| 2 | - Audio - R | 0.5 V_rms / 10 kohm | ⊖ |
| 3 | - Audio - L | 0.5 V_rms / 1 kohm | ⊖→ |
| 4 | - Audio - gnd | Ground | ⏚ |
| 5 | - Blue - gnd | Ground | ⏚ |
| 6 | - Audio - L | 0.5 V_rms / 10 kohm | ⊖ |
| 7 | - Blue/U - in | 0.7 V_pp / 75 ohm | ⊖ |
| 8 | - CVBS - status | 0 - 2 V: INT | |
| | | 4.5 - 7 V: EXT 16:9 | |
| | | 9.5 - 12 V: EXT 4:3 | |
| 9 | - Green - gnd | Ground | ⏚ |
| 10 | - n.c. | | |
| 11 | - Green/Y - in | 0.7 V_pp / 75 ohm | ⊖ |
| 12 | - n.c. | | |
| 13 | - Red - gnd | Ground | ⏚ |
| 14 | - FBL - gnd | Ground | ⏚ |
| 15 | - Red/V - in | 0.7 V_pp / 75 ohm | ⊖ |
| 16 | - Status/FBL | 0 - 0.4 V: INT | |
| | | 1 - 3 V: EXT / 75 ohm | ⊖ |
| 17 | - Video | Ground | ⏚ |
| 18 | - Video | Ground | ⏚ |
| 19 | - CVBS - out | 1 V_pp / 75 ohm | ⊖→ |
| 20 | - CVBS - in | 1 V_pp / 75 ohm | ⊖ |
| 21 | - Shielding | Ground | ⏚ |

***External 2: CVBS- In and SVHS - In***

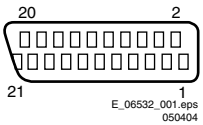


**Figure 1-4 SCART connector**

| | | | |
|---|---|---|---|
| 1 | - Audio - R | 0.5 V_rms / 1 kohm | ⊖→ |
| 2 | - Audio - R | 0.5 V_rms / 10 kohm | ⊖ |
| 3 | - Audio - L | 0.5 V_rms / 1 kohm | ⊖→ |
| 4 | - Audio - gnd | Ground | ⏚ |
| 5 | - Blue - gnd | Ground | ⏚ |
| 6 | - Audio - L | 0.5 V_rms / 10 kohm | ⊖ |
| 7 | - n.c. | | |
| 8 | - CVBS - status | 0 - 2 V: INT | |
| | | 4.5 - 7 V: EXT 16:9 | |
| | | 9.5 - 12 V: EXT 4:3 | |
| 9 | - Green - gnd | Ground | ⏚ |
| 10 | - n.c. | | |
| 11 | - n.c. | | |
| 12 | - n.c. | | |
| 13 | - Red - gnd | Ground | ⏚ |
| 14 | - FBL - gnd | Ground | ⏚ |
| 15 | - YC-C - in | 0.7 V_pp / 75 ohm | ⊖ |
| 16 | - n.c. | | |
| 17 | - Video | Ground | ⏚ |
| 18 | - Video | Ground | ⏚ |
| 19 | - CVBS - out | 1 V_pp / 75 ohm | ⊖→ |
| 20 | - Y/CVBS - in | 1 V_pp / 75 ohm | ⊖ |
| 21 | - Shielding | Ground | ⏚ |

## 1.3 Chassis Overview

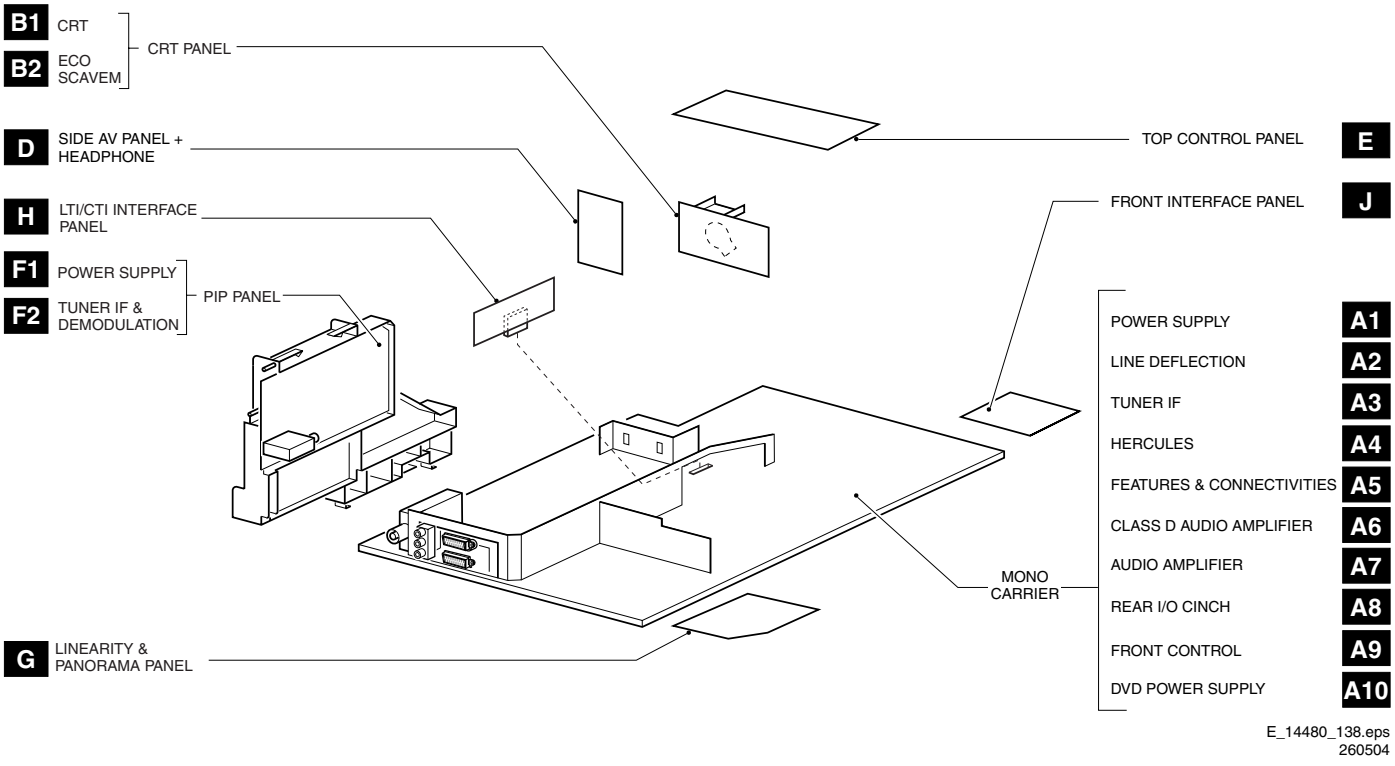


**Figure 1-5 PWB location**

# 2. Safety and Maintenance Instructions, Warnings, and Notes

## 2.1 Safety Instructions

Safety regulations require that **during** a repair:

- Due to the chassis concept, a very large part of the circuitry (incl. deflection) is 'hot'. Therefore, connect the set to the mains via an isolation transformer.
- Replace safety components, indicated by the symbol ⚠, only by components identical to the original ones. Any other component substitution (other than original type) may increase risk of fire or electrical shock hazard.
- Wear safety goggles when you replace the CRT.

Safety regulations require that **after** a repair, you must return the set in its original condition. Pay, in particular, attention to the following points:

- General repair instruction: as a strict precaution, we advise you to re-solder the solder connections through which the horizontal deflection current is flowing. In particular this is valid for the:
  1. Pins of the line output transformer (LOT).
  2. Fly-back capacitor(s).
  3. S-correction capacitor(s).
  4. Line output transistor.
  5. Pins of the connector with wires to the deflection coil.
  6. Other components through which the deflection current flows.

**Note:** This re-soldering is advised to prevent bad connections due to metal fatigue in solder connections, and is therefore only necessary for television sets more than two years old.

- Route the wire trees and EHT cable correctly and secure them with the mounted cable clamps.
- Check the insulation of the mains cord for external damage.
- Check the strain relief of the mains cord for proper function, to prevent the cord from touching the CRT, hot components, or heat sinks.
- Check the electrical DC resistance between the mains plug and the secondary side (only for sets that have an isolated power supply). Do this as follows:
  1. Unplug the mains cord and connect a wire between the two pins of the mains plug.
  2. Turn on the main power switch (keep the mains cord unplugged!).
  3. Measure the resistance value between the pins of the mains plug and the metal shielding of the tuner or the aerial connection of the set. The reading should be between 4.5 MΩ and 12 MΩ.
  4. Switch the TV 'off' and remove the wire between the two pins of the mains plug.
- Check the cabinet for defects, to prevent the possibility of the customer touching any internal parts.

## 2.2 Maintenance Instructions

We recommend a maintenance inspection carried out by qualified service personnel. The interval depends on the usage conditions:

- When a customer uses the set under normal circumstances, for example in a living room, the recommended interval is three to five years.
- When a customer uses the set in an environment with higher dust, grease, or moisture levels, for example in a kitchen, the recommended interval is one year.
- The maintenance inspection includes the following actions:
  1. Perform the 'general repair instruction' noted above.
  2. Clean the power supply and deflection circuitry on the chassis.
  3. Clean the picture tube panel and the neck of the picture tube.

## 2.3 Warnings

- In order to prevent damage to ICs and transistors, avoid all high voltage flashovers. In order to prevent damage to the picture tube, use the method shown in Fig. 2-1, to discharge the picture tube. Use a high voltage probe and a multi-meter (position V_dc). Discharge until the meter reading is 0 V (after approx. 30 s).

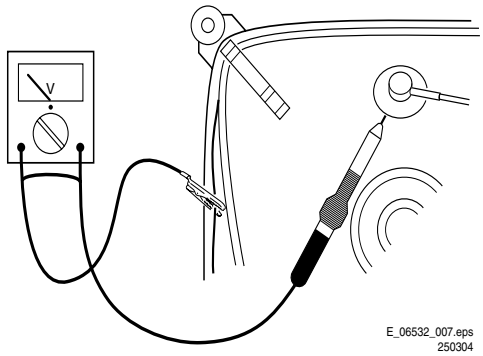


**Figure 2-1 Discharge picture tube**

- All ICs and many other semiconductors are susceptible to electrostatic discharges (ESD, ⚠). Careless handling during repair can reduce life drastically. Make sure that, during repair, you are connected with the same potential as the mass of the set by a wristband with resistance. Keep components and tools also at this potential. Available ESD protection equipment:
  – Complete kit ESD3 (small tablemat, wristband, connection box, extension cable and ground cable) 4822 310 10671.
  – Wristband tester 4822 344 13999.
- Together with the deflection unit and any multi-pole unit, flat square picture tubes form an integrated unit. The deflection and the multi-pole units are set optimally at the factory. We do not recommend adjusting this unit during repair.
- Be careful during measurements in the high voltage section and on the picture tube.
- Never replace modules or other components while the unit is 'on'.
- When you align the set, use plastic rather than metal tools. This will prevent any short circuits and the danger of a circuit becoming unstable.

## 2.4 Notes

### 2.4.1 General

- Measure the voltages and waveforms with regard to the chassis (= tuner) ground (⏚), or hot ground (⏚), depending on the tested area of circuitry.
- The voltages and waveforms shown in the diagrams are indicative. Measure them in the Service Default Mode (see chapter 5) with a color bar signal and stereo sound (L: 3 kHz, R: 1 kHz unless stated otherwise) and picture carrier at 475.25 MHz for PAL, or 61.25 MHz for NTSC (channel 3).
- Where necessary, measure the waveforms and voltages with (⊓⊓) and without (⊼⊼) aerial signal. Measure the voltages in the power supply section both in normal operation (⏻) and in standby (⏻). These values are indicated by means of the appropriate symbols.

- The picture tube panel has printed spark gaps. Each spark gap is connected between an electrode of the picture tube and the Aquadag coating.
- The semiconductors indicated in the circuit diagram and in the parts lists, are interchangeable per position with the semiconductors in the unit, irrespective of the type indication on these semiconductors.

### 2.4.2 Schematic Notes

- All resistor values are in ohms and the value multiplier is often used to indicate the decimal point location (e.g. 2K2 indicates 2.2 kohm).
- Resistor values with no multiplier may be indicated with either an "E" or an "R" (e.g. 220E or 220R indicates 220 ohm).
- All capacitor values are expressed in micro-farads (μ= x 10^-6), nano-farads (n= x 10^-9), or pico-farads (p= x 10^-12).
- Capacitor values may also use the value multiplier as the decimal point indication (e.g. 2p2 indicates 2.2 pF).
- An "asterisk" (*) indicates component usage varies. Refer to the diversity tables for the correct values.
- The correct component values are listed in the Electrical Replacement Parts List. Therefore, always check this list when there is any doubt.

### 2.4.3 Practical Service Precautions

- **It makes sense to avoid exposure to electrical shock.** While some sources are expected to have a possible dangerous impact, others of quite high potential are of limited current and are sometimes held in less regard.
- **Always respect voltages**. While some may not be dangerous in themselves, they can cause unexpected reactions - reactions that are best avoided. Before reaching into a powered TV set, it is best to test the high voltage insulation. It is easy to do, and is a good service precaution.
- **Before powering up the TV set with the back cover off** (or on a test fixture), attach a clip lead to the CRT DAG ground and to a screwdriver blade that has a well insulated handle. After the TV is powered "on" and high voltage has developed, probe the anode lead with the blade, starting at the case of the High Voltage Transformer (flyback - IFT). Move the blade to within two inches of the connector of the CRT. **If there is an arc, you found it the easy way, without getting a shock!** If there is an arc to the screwdriver blade, replace the part that is causing the problem: the High Voltage Transformer or the lead (if it is removable).

### 2.4.4 Lead Free Solder

This set is manufactured with lead-free production technology. This is also indicated on the PWB by the PHILIPS lead-free logo (either by a service-printing or by a sticker).

**Figure 2-2 Lead-free logo**

This set is produced with lead-free solder alloy as well as with lead-free sub-parts. It can be considered as lead-free.
Due to this fact, some rules have to be respected by the workshop during a repair:

- Use only lead-free soldering tin Philips SAC305 with order code 0622 149 00106. If lead-free solder paste is required, please contact the manufacturer of your soldering equipment.
- Use only adequate solder tools applicable for lead-free soldering tin.
- Adjust your solder tool so that a temperature around 217 - 220 deg. C is reached at the solder joint.
- Do not mix lead-free soldering tin with leaded soldering tin; this will lead to unreliable solder joints!
- Use only original spare parts listed in this manual. These are lead-free parts!
- On the website *www.atyourservice.ce.philips.com* you can find more information on:
  - Aspects of lead-free technology.
  - BGA (de-)soldering, heating-profiles of BGAs used in Philips sets, and others

# 3. Directions for Use

You can download this information from the following website:
http://www.philips.com/support

1. Click on “Downloads and Troubleshooting” [1].
2. Fill in the TV model/type number in the field “Which Model/ Type?” [2] and click on “Search” [3].
   **Note:** The correct model/typenumber can be found on the rear cover of the set. If you do not have the complete model/typenumber, just fill in e.g. “32PW95” or “PW95” (do not use wildcards).
3. When results are returned, click on the desired model/ typenumber under “Model” [4].
4. Now, click on the “Owner's manual” [5] in the desired language. To read/open the PDF files you can download and install the free Acrobat Reader
   http://www.adobe.com/products/acrobat/readstep2.html

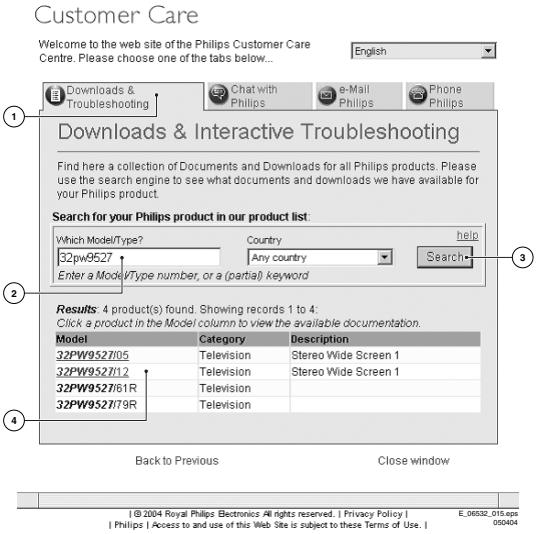


**Figure 3-1 Screenshot DFU website (1)**

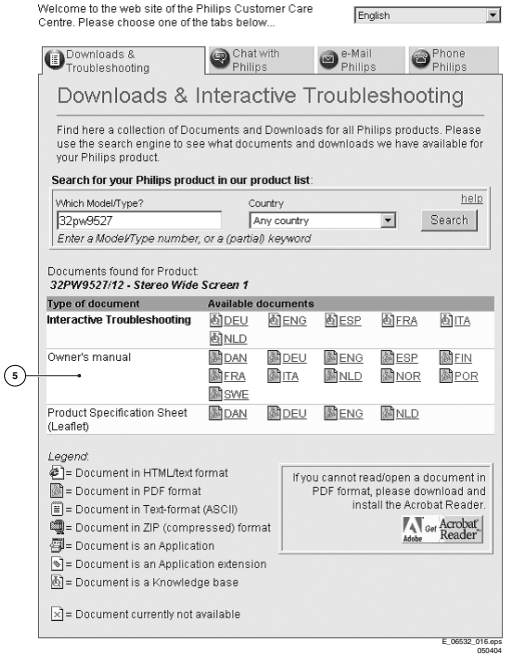


**Figure 3-2 Screenshot DFU website (2)**

# 4. Mechanical Instructions

Index of this chapter:
1. Set Disassembly
2. Service Position
3. Assies/Panels Removal
4. Set Re-assembly

**Note:** Figures below can deviate slightly from the actual situation, due to different set executions.

## 4.1 Set Disassembly

**Warning:** Be sure to disconnect the AC power from the set before opening it.

### 4.1.1 Rear Cover

1. Remove all fixation screws of the rear cover (do not forget the screws that hold the rear connection panel).
2. Pull the rear cover backwards to remove it.

## 4.2 Service Position

Before placing the Mono Carrier in its service position, remove the Front Interface assy/panel (see paragraph “Front Interface Assy/Panel removal”), the Side AV assy/panel (see paragraph “Side AV Assy/Panel removal”) and the PIP assy/panel (if exists) (see paragraph “PIP Assy/Panel removal”).

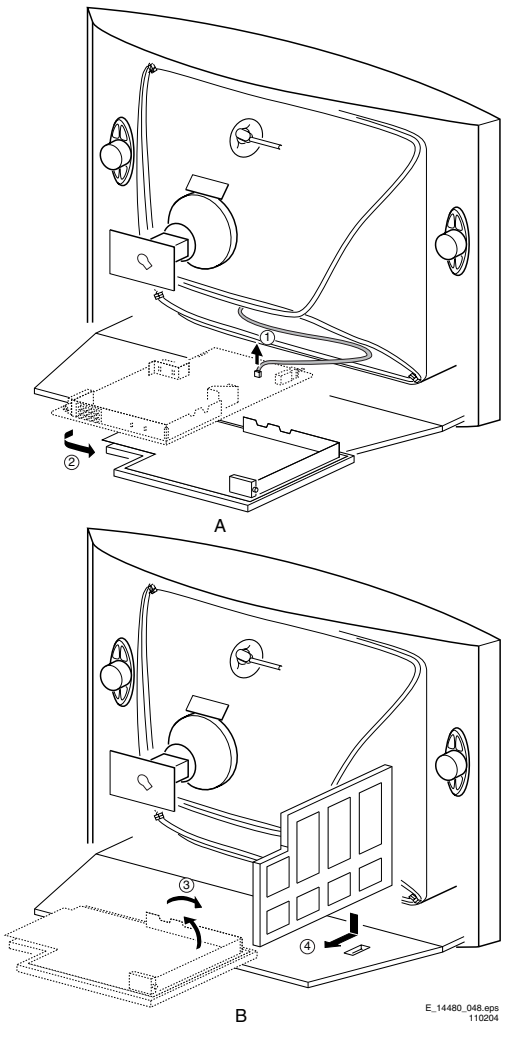


**Figure 4-1 Service position Mono Carrier**

1. Disconnect the degaussing coil [1].
2. Release the two fixation clamps (at the mid left and mid right side of the bracket), and remove the bracket from the bottom tray, by pulling it backwards [2].
3. Turn the chassis tray 90 degrees counter clockwise.
4. Move the panel bracket somewhat to the left and flip it 90 degrees [3], with the components towards the CRT.
5. Turn the panel bracket with the rear I/O toward the CRT.
6. Place the hook of the tray in the fixation hole of the cabinet bottom [4] and secure it.

## 4.3 Assies/Panels Removal

### 4.3.1 Front Interface Assy/Panel Removal

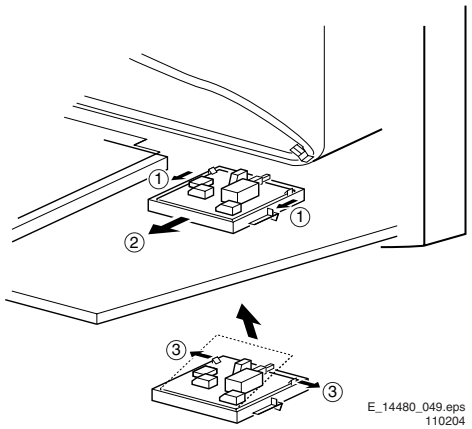


**Figure 4-2 Front interface assy/panel removal**

1. Remove the complete module from the bottom plate, by pulling the two fixation clamps upward [1], while sliding the module away from the CRT [2].
   **Note**: these clamps are difficult to access.
2. Release the two fixation clamps [3] at the side of the bracket, and lift the panel out of the bracket (it hinges at one side).

### 4.3.2 Side AV Assy/Panel Removal

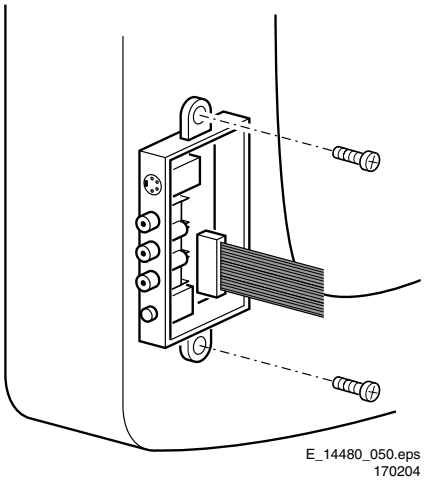


**Figure 4-3 Side AV assy/panel removal**

1. Remove the two fixation screws, and remove the complete Side AV assembly.
2. Release the two fixation clamps, and lift the panel out of the bracket.

#### 4.3.3 LTI/CTI Interface Panel Removal

Remove the LTI/CTI Interface panel from the Mono Carrier, by disconnecting it from connector 1212.

#### 4.3.4 Top Control Assy/Panel Removal

**Notes:**
- PV02 styling: assy is mounted in the front cabinet;
- FL13B styling: assy is mounted in the rear cover.

1. Remove the two fixation screws.
2. Push the assy a little bit upwards, and then pull it backwards to release it from the front hinge.
3. Lift the panel from its bracket, while releasing the four fixation clamps.

#### 4.3.5 Linearity Assy/Panel Removal

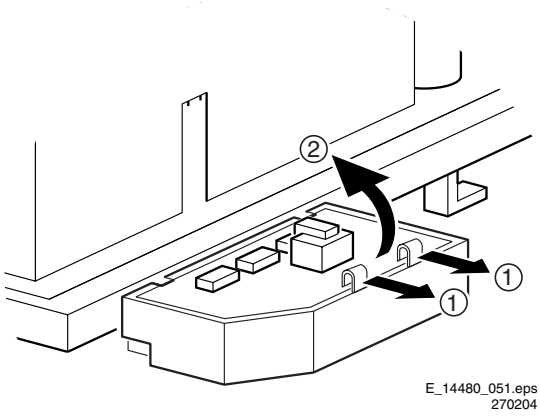


**Figure 4-4 Linearity assy/panel removal**

1. Release the two fixation clamps [1] to lift the panel out of the bracket [2].

#### 4.3.6 PIP Assy/Panel Removal

1. Release the two fixation clamps to lift the panel out of the bracket.

## 4.4 Set Re-assembly

To re-assemble the whole set, do all processes in reverse order.

**Note:** before you mount the rear cover, perform the following checks:
1. Check whether the AC power cord is mounted correctly in its guiding brackets.
2. Check whether all cables are replaced in their original position

# 5. Service Modes, Error Codes, and Fault Finding

Index:
1. Test Points.
2. Service Modes.
3. Problems and Solving Tips (related to CSM).
4. ComPair.
5. Error Codes.
6. The Blinking LED Procedure.
7. Protections.
8. Repair Tips.

## 5.1 Test Points

The chassis is equipped with test points printed on the circuit board assemblies. These test points refer to the functional blocks:

**Table 5-1 Test point overview**

| Test point | Circuit | Diagram |
|---|---|---|
| F508, F535, F536, F537, F552, F561, F563, F573, F664,I513, I518, I519, I524, I531, I533, I546 | Power supply | A1 |
| F401, F412, F413, F414, F418, F452, F453, F455, F456, F458, F459, F460, F461, I408, I416, I417, I420, I462, I468 | Line + Frame Deflection | A2 |
| F003, F004, I001, I002 | Tuner IF | A3 |
| F201, F203, F205, F206 | Hercules | A4 |
| F240, F241, F242 | Features & Connectivities | A5 |
| F952, F955, I951, I952 | Audio Amplifier | A7 |
| F692 | Front Control | A9 |
| F331, F332, F333, F338, F339, F341, F351, F353, F354 | CRT Panel | B1 |
| F361, F362, F381, F382 | ECO Scavem | B2 |

Perform measurements under the following conditions:
- Television set in Service Default Alignment Mode.
- Video input: Colour bar signal.
- Audio input: 3 kHz left channel, 1 kHz right channel.

## 5.2 Service Modes

Service Default mode (SDM) & Service Alignment Mode (SAM) offers several features for the service technician, while the Customer Service Mode (CSM) is used for communication between the call centre and the customer.

This chassis also offers the option of using ComPair, a hardware interface between a computer and the TV chassis. It offers the abilities of structured troubleshooting, error code reading, and software version readout for all these chassis. *Minimum requirements for ComPair:* a Pentium processor, a Windows OS, and a CD-ROM drive (see "ComPair" section).

**Table 5-2 Software cluster overview**

| SW Clusters | SW Version | First Mask | Remarks |
|---|---|---|---|
| L4LEF1 | L04EF11.0 | TDA12020H1/N1B11 | Western Europe |
| | | TDA12021H1/N1B11 | Radio 4:3 set only. |
| | | | |
| L4LEF2 | L04EF21.0 | TDA12020H1/N1B11 | Eastern Europe |
| | | TDA12021H1/N1B11 | Radio 4:3 set only. |
| | | | |
| L4LEF3 | L04EF31.0 | TDA12020H1/N1B11 | Western Europe |
| | | TDA12021H1/N1B11 | PIP |
| | | | |
| L4LEF4 | L04EF41.0 | TDA12020H1/N1B11 | Eastern Europe |
| | | TDA12021H1/N1B11 | PIP |
| | | | |
| L4LEF5 | L04EF51.0 | TDA12020H1/N1B11 | Western Europe |
| | | TDA12021H1/N1B11 | Radio & PIP. |
| | | | |
| L4LEF6 | L04EF61.0 | TDA12020H1/N1B11 | Eastern Europe |
| | | TDA12021H1/N1B11 | Radio & PIP. |
| | | | |
| L4LEF7 | L04EF71.0 | TDA12020H1/N1B11 | ICON UI |

### 5.2.1 Service Default Mode (SDM)

***Purpose***
- To create a predefined setting for measurements to be made.
- To override software protections.
- To start the blinking LED procedure.

***Specifications***
- Tuning frequency: 475.25 MHz.
- Colour system: PAL/SECAM.
- All picture settings at 50% (brightness, colour contrast, hue).
- Bass, treble and balance at 50 %; volume at 25 %.
- All service-unfriendly modes (if present) are disabled. The service unfriendly modes are:
  - Timer / Sleep timer.
  - Child / parental lock.
  - Blue mute.
  - Hotel / hospital mode.
  - Auto shut off (when no 'IDENT' video signal is received for 15 minutes).
  - Skipping of non-favourite presets / channels.
  - Auto-storage of personal presets.
  - Auto user menu time-out.
  - Auto Volume Levelling (AVL).

***How to enter***

To enter SDM, use one of the following methods:
- Press the following key sequence on the remote control transmitter: **'0 6 2 5 9 6'** directly followed by the **'MENU'** button (do not allow the display to time out between entries while keying the sequence).
- Short jumper wires 9252 and 9275 on the family board (see Fig. 8-1) and apply mains. Then press the power button (remove the short after start-up).
  **Caution**: Entering SDM by shorting wires 9252 and 9275 will override the +8V-protection. Do this only for a short period. When doing this, the service-technician must know exactly what he is doing, as it could damage the television set.
- Or via ComPair (with the ComPair 'Tools', it should be possible to enter SDM via the ComPair interface).

After entering SDM, the following screen is visible, with SDM in the upper right corner of the screen to indicate that the television is in Service Default Alignment Mode.

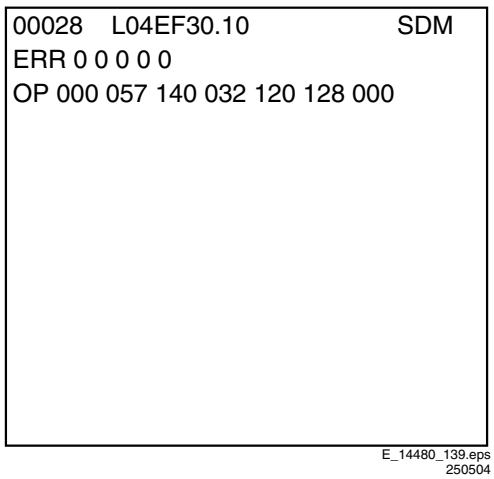


**Figure 5-1 SDM menu**

***How to navigate***

Use one of the following methods:

- When you press the MENU button on the remote control, the set will switch on the normal user menu in the SDM mode.
- On the TV, press and hold the 'VOLUME down' and press the 'CHANNEL down' for a few seconds, to switch from SDM to SAM and reverse.

***How to exit***

Switch the set to STANDBY by pressing the POWER button on the remote control transmitter or the television set.
If you turn the television set off by removing the Mains (i.e., unplugging the television) without using the POWER button, the television set will remain in SDM when mains is re-applied, and the error buffer is not cleared.

### 5.2.2 Service Alignment Mode (SAM)

***Purpose***

- To change option settings.
- To display / clear the error code buffer.
- To perform alignments.

***Specifications***

- Run timer (maximum five digits displayed)
- Software version, Error & Option Bytes display
- Clear error buffer.
- Option settings
- AKB switching
- Software alignments (Tuner, 2 Tuner PIP, White Tone, Geometry & Audio)
- NVM Editor
- ComPair Mode switching

***How to enter***

To enter SAM, use one of the following methods:

- Press the following key sequence on the remote control transmitter: **'0 6 2 5 9 6'** directly followed by the “On Screen Display icon “i +” button (do not allow the display to time out between entries while keying the sequence).
- Or via ComPair.

After entering SAM, the following screen is visible, with SAM in the upper right corner of the screen to indicate that the television is in Service Alignment Mode.

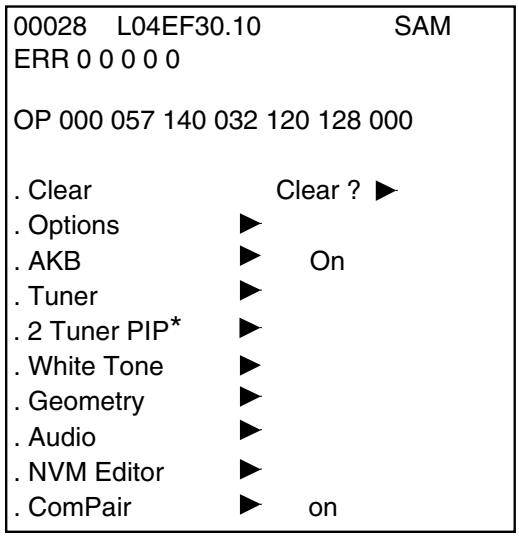


**Figure 5-2 SAM menu**

***Menu explanation***

1. **LLLLL.** This represents the run timer. The run timer counts normal operation hours, but does not count standby hours (maximum four digits displayed).
2. **AAABCD-X.Y.** This is the software identification of the main microprocessor:
   - **A** = the project name (L04).
   - **B** = the region: E= Europe, A= Asia Pacific, U= NAFTA, L= LATAM.
   - **C** = the software diversity:
     - **Europe:** T = 1 page TXT, F = Full TXT, V = Voice control.
     - **LATAM and NAFTA:** N = Stereo non-dBx, S = Stereo dBx.
     - **Asian Pacific:** F = Full TXT, N = non TXT, C = NTSC.
     - **ALL regions:** M = mono, D = DVD, Q = Mk2.
   - **D** = the language cluster number.
   - **X** = the main software version number (updated with a major change that is incompatible with previous versions).
   - **Y** = the sub software version number (updated with a minor change that is compatible with previous versions).
3. **SAM.** Indication of the Service Alignment Mode.
4. **Error Buffer.** Shows all errors detected since the last time the buffer was erased. Five errors possible.
5. **Option Bytes.** Used to set the option bytes. See 'Options' in the Alignments section for a detailed description. Seven codes are possible.
6. **Clear.** Erases the contents of the error buffer. Select the CLEAR menu item and press the MENU RIGHT key. The content of the error buffer is cleared.
7. **Options.** Used to set the option bits. See 'Options' in the Alignments section for a detailed description.
8. **AKB.** Used to disable (Off) or enable (On) the 'black current loop' (AKB = Auto Kine Bias).
9. **Tuner.** Used to align the tuner. See 'Tuner' in the Alignments section for a detailed description.
10. **2 Tuner PIP.** Used to align the tuner PIP (optional)
11. **White Tone.** Used to align the white tone. See 'White Tone' in the Alignments section for a detailed description.
12. **Geometry.** Used to align the geometry settings of the television. See 'Geometry' in the Alignments section for a detailed description.
13. **Audio.** No audio alignment is necessary for this television set.

14. **NVM Editor.** Used to change the NVM data in the television set.
15. **ComPair Mode.** Used to switch on the television to ISP mode (for uploading software)

***How to navigate***
- In SAM, select menu items with the MENU UP/DOWN keys on the remote control transmitter. The selected item will be highlighted. When not all menu items fit on the screen, use the MENU UP/DOWN keys to display the next / previous menu items.
- With the MENU LEFT/RIGHT keys, it is possible to:
  – Activate the selected menu item.
  – Change the value of the selected menu item.
  – Activate the selected submenu.
- In SAM, when you press the MENU button twice, the set will switch to the normal user menus (with the SAM mode still active in the background). To return to the SAM menu press the MENU or STATUS/EXIT button.
- When you press the MENU key in while in an SDAM submenu, you will return to the previous menu.

***How to store SAM settings***
To store settings changed in SAM leave the top level SAM menu by using the POWER button on the remote control transmitter or the television set.

***How to exit***
Switch the set to STANDBY by pressing the POWER button on the remote control transmitter or the television set.
If you turn the television set off by removing the mains (i.e., unplugging the television) without using the POWER button, the television set will remain in SAM when mains is re-applied, and the error buffer is not cleared.

#### 5.2.3 Customer Service Mode (CSM)

***Purpose***
The Customer Service Mode shows error codes and information on the TV operation settings. The call centre can instruct the customer to enter CSM by telephone and read off the information displayed. This helps the call centre to diagnose problems and failures in the TV set before making a service call.
The CSM is a read-only mode; therefore, modifications are not possible in this mode.

***How to enter***
To enter CSM, press the following key sequence on the remote control transmitter: '**1 2 3 6 5 4**' (do not allow the display to time out between entries while keying the sequence).

Upon entering the Customer Service Mode, the following screen will appear:

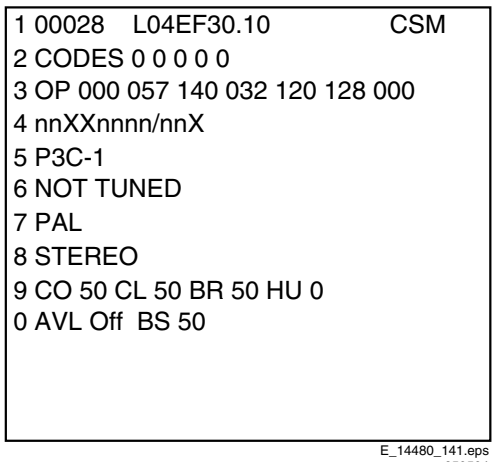


**Figure 5-3 CSM menu**

***Menu explanation***
1. Indication of the service mode (CSM = Customer Service Mode).
2. Reserved item.
3. Software identification of the main microprocessor (see 'Service Default Alignment Mode' for an explanation)
4. Reserved item for P3C call centres (AKBS stands for Advanced Knowledge Base System).
5. Indicates the type of TV system or whether or not the television is receiving an 'IDENT' signal on the selected source. If no 'IDENT' signal is detected, the display will read 'NOT TUNED'
6. Displays the last five errors detected in the error code buffer.

***How to exit***
To exit CSM, use one of the following methods:
- Press the MENU, STATUS/EXIT, or POWER button on the remote control transmitter.
- Press the POWER button on the television set.

## 5.3 Problems and Solving Tips Related to CSM

#### 5.3.1 Picture Problems

**Note**: The problems described below are all related to the TV settings. The procedures used to change the value (or status) of the different settings are described.

***Picture too dark or too bright***
If:
- The picture improves when you have press the AUTO PICTURE button on the remote control transmitter, or
- The picture improves when you enter the Customer Service Mode

Then:
1. Press the AUTO PICTURE button on the remote control transmitter repeatedly (if necessary) to choose PERSONAL picture mode.
2. Press the MENU button on the remote control transmitter. This brings up the normal user menu.
3. In the normal user menu, use the MENU UP/DOWN keys to highlight the PICTURE sub menu (if necessary).
4. Press the MENU LEFT/RIGHT keys to enter the PICTURE sub menu.
5. Use the MENU UP/DOWN keys (if necessary) to select BRIGHTNESS.
6. Press the MENU LEFT/RIGHT keys to increase or decrease the BRIGHTNESS value.
7. Use the MENU UP/DOWN keys to select PICTURE.

8. Press the MENU LEFT/RIGHT keys to increase or decrease the PICTURE value.
9. Press the MENU button on the remote control transmitter twice to exit the user menu.
10. The new PERSONAL preference values are automatically stored.

***White line around picture elements and text***
If:
The picture improves after you have pressed the AUTO PICTURE button on the remote control transmitter

Then:
1. Press the AUTO PICTURE button on the remote control transmitter repeatedly (if necessary) to choose PERSONAL picture mode.
2. Press the MENU button on the remote control transmitter. This brings up the normal user menu.
3. In the normal user menu, use the MENU UP/DOWN keys to highlight the PICTURE sub menu (if necessary).
4. Press the MENU LEFT/RIGHT keys to enter the PICTURE sub menu.
5. Use the MENU UP/DOWN keys to select SHARPNESS.
6. Press the MENU LEFT key to decrease the SHARPNESS value.
7. Press the MENU button on the remote control transmitter twice to exit the user menu.
8. The new PERSONAL preference value is automatically stored.

***Snowy picture***
To enter CSM, press the following key sequence on the remote control transmitter: '**123654'** (do not allow the display to time out between entries while keying the sequence).

Check CSM line 5. If this line reads 'Not Tuned,' check the following:
- Antenna not connected. Connect the antenna.
- No antenna signal or bad antenna signal. Connect a proper antenna signal.
- The tuner is faulty (in this case line 6, the Error Buffer line, will contain error number 10). Check the tuner and replace/ repair the tuner if necessary.

***Black and white picture***
If:
- The picture improves after you have pressed the AUTO PICTURE button on the remote control transmitter

Then:
1. Press the AUTO PICTURE button on the remote control transmitter repeatedly (if necessary) to choose PERSONAL picture mode.
2. Press the MENU button on the remote control transmitter. This brings up the normal user menu.
3. In the normal user menu, use the MENU UP/DOWN keys to highlight the PICTURE sub menu (if necessary).
4. Press the MENU LEFT/RIGHT keys to enter the PICTURE sub menu.
5. Use the MENU UP/DOWN keys to select COLOR.
6. Press the MENU RIGHT key to increase the COLOR value.
7. Press the MENU button on the remote control transmitter twice to exit the user menu.
8. The new PERSONAL preference value is automatically stored.

***Menu text not sharp enough***
If:
- The picture improves after you have pressed the AUTO PICTURE button on the remote control transmitter.

Then:
1. Press the AUTO PICTURE button on the remote control transmitter repeatedly (if necessary) to choose PERSONAL picture mode.
2. Press the MENU button on the remote control transmitter. This brings up the normal user menu.
3. In the normal user menu, use the MENU UP/DOWN keys to highlight the PICTURE sub menu (if necessary).
4. Press the MENU LEFT/RIGHT keys to enter the PICTURE sub menu.
5. Use the MENU UP/DOWN keys to select PICTURE.
6. Press the MENU LEFT key to decrease the PICTURE value.
7. Press the MENU button on the remote control transmitter twice to exit the user menu.
8. The new PERSONAL preference value is automatically stored.

## 5.4 ComPair

### 5.4.1 Introduction

ComPair (Computer Aided Repair) is a service tool for Philips Consumer Electronics products. ComPair is a further development on the European DST (service remote control), which allows faster and more accurate diagnostics. ComPair has three big advantages:
- ComPair helps you to quickly get an understanding on how to repair the chassis in a short time by guiding you systematically through the repair procedures.
- ComPair allows very detailed diagnostics (on I2C level) and is therefore capable of accurately indicating problem areas. You do not have to know anything about I2C commands yourself because ComPair takes care of this.
- ComPair speeds up the repair time since it can automatically communicate with the chassis (when the microprocessor is working) and all repair information is directly available. When ComPair is installed together with the SearchMan electronic manual of the defective chassis, schematics and PWBs are only a mouse click away.

### 5.4.2 Specifications

ComPair consists of a Windows based faultfinding program and an interface box between PC and the (defective) product. The ComPair interface box is connected to the PC via a serial or RS232 cable.
In this chassis, the ComPair interface box and the TV communicate via a bi-directional service cable via the service connector.

The ComPair faultfinding program is able to determine the problem of the defective television. ComPair can gather diagnostic information in two ways:
- **Automatic** (by communication with the television): ComPair can automatically read out the contents of the entire error buffer. Diagnosis is done on I2C level. ComPair can access the I2C bus of the television. ComPair can send and receive I2C commands to the micro controller of the television. In this way, it is possible for ComPair to communicate (read and write) to devices on the I2C busses of the TV-set.
- **Manually** (by asking questions to you): Automatic diagnosis is only possible if the micro controller of the television is working correctly and only to a certain extend. When this is not the case, ComPair will guide you through the faultfinding tree by asking you questions (e.g. *Does the screen give a picture? Click on the correct answer: YES /*

*NO*) and showing you examples (e.g. *Measure test-point I7 and click on the correct waveform you see on the oscilloscope*). You can answer by clicking on a link (e.g. text or a waveform picture) that will bring you to the next step in the faultfinding process.

By a combination of automatic diagnostics and an interactive question / answer procedure, ComPair will enable you to find most problems in a fast and effective way.

Beside fault finding, ComPair provides some **additional features** like:

- Up- or downloading of pre-sets.
- Managing of pre-set lists.
- Emulation of the Dealer Service Tool (DST).
- If both ComPair and SearchMan (Electronic Service Manual) are installed, all the schematics and the PWBs of the set are available by clicking on the appropriate hyperlink. **Example**: *Measure the DC-voltage on capacitor C2568 (Schematic/Panel) at the Mono-carrier*.
  - Click on the 'Panel' hyperlink to automatically show the PWB with a highlighted capacitor C2568.
  - Click on the 'Schematic' hyperlink to automatically show the position of the highlighted capacitor.

#### 5.4.3 How To Connect ComPair

1. First, install the ComPair Browser software (see the Quick Reference Card for installation instructions).
2. Connect the RS232 interface cable between a free serial (COM) port of your PC and the PC connector (marked with 'PC') of the ComPair interface.
3. Connect the mains adapter to the supply connector (marked with 'POWER 9V DC') of the ComPair interface.
4. Switch the ComPair interface “off”.
5. Switch the television set “off” with the mains switch.
6. Connect the ComPair interface cable between the connector on the rear side of the ComPair interface (marked with 'I2C') and the ComPair (or *Service*) connector at the rear side of the TV (for its location see figure 8-1 in chapter “Alignments”).
7. Plug the mains adapter in a mains outlet, and switch the interface “on”. The green and red LEDs light up together. The red LED extinguishes after approx. 1 second while the green LED remains lit.
8. Start the ComPair program and read the 'Introduction' chapter.

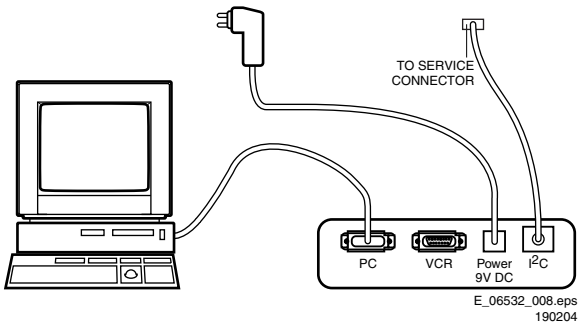


**Figure 5-4 ComPair connection**

#### 5.4.4 How To Order

ComPair order codes:

- Starter kit ComPair32/SearchMan32 software and ComPair interface (excl. transformer): 3122 785 90450.
- ComPair interface (excluding transformer): 4822 727 21631.
- Starter kit ComPair32 software (registration version): 3122 785 60040.
- Starter kit SearchMan32 software: 3122 785 60050.
- ComPair32 CD (update): 3122 785 60070 (year 2002, 3122 785 60110 (year 2003).
- SearchMan32 CD (update): 3122 785 60080 (year 2002), 3122 785 60120 (year 2003).
- ComPair interface cable: 3122 785 90004.
- Transformer (non-UK): 4822 727 21632.
- Transformer UK: 4822 727 21633.

**Note:** If you encounter any problems, contact your local support desk.

## 5.5 Error Codes

The error code buffer contains all errors detected since the last time the buffer was erased. The buffer is written from left to right. When an error occurs that is not yet in the error code buffer, it is displayed at the left side and all other errors shift one position to the right.

#### 5.5.1 How To Read The Error Buffer

You can read the error buffer in 3 ways:

- On screen via the SDAM (if you have a picture).
  **Examples:**
  - ERROR: 0 0 0 0 0 : No errors detected
  - ERROR: 6 0 0 0 0 : Error code 6 is the last and only detected error
  - ERROR: 9 6 0 0 0 : Error code 6 was detected first and error code 9 is the last detected (newest) error
- Via the blinking LED procedure (when you have no picture). See 'The Blinking LED Procedure'.
- Via ComPair.

#### 5.5.2 How To Clear The Error Buffer

The error code buffer is cleared in the following cases:

- By using the CLEAR command in the SDAM menu:
  - To enter SAM, press the following key sequence on the remote control transmitter: '062596' directly followed by the “OSD" icon button (do not allow the display to time out between entries while keying the sequence).
  - Make sure the menu item CLEAR is highlighted. Use the MENU UP/DOWN buttons, if necessary.
  - Press the MENU RIGHT button to clear the error buffer. The text on the right side of the 'CLEAR' line will change from 'CLEAR?' to 'CLEARED'
- If the contents of the error buffer have not changed for 50 hours, the error buffer resets automatically.

**Note:** If you exit SAM by disconnecting the Mains from the television set, the error buffer is not reset.

#### 5.5.3 Error Codes

In case of non-intermittent faults, write down the errors present in the error buffer and clear the error buffer before you begin the repair. This ensures that old error codes are no longer present.
If possible, check the entire contents of the error buffer. In some situations, an error code is only the result of another error and not the actual cause of the problem (for example, a fault in the protection detection circuitry can also lead to a protection).

**Table 5-3 Error codes overview**

| Error | Device | Error description | Check item | Diagram |
|---|---|---|---|---|
| 0 | Not applicable | No Error | | |
| 1 | Not applicable | X-Ray / over-voltage protection (US only) | 2411, 2412, 2413, 6404, 6411, 6412. | A2 |
| 2 | Not applicable | High beam (BCI) protection | 3404, 7405 | A2 |
| 3 | Not applicable | Vertical guard protection | 3466, 7451, 7452, 7453, 7454 | A2 |
| 4 | Tuner UA1316/A | I2C error while communicating with 2nd tuner | 1000, 5010 (PIP Module) | F2 |
| 5 | Not applicable | +5v protection | 7604, 7605 | A5 |
| 6 | I2C bus | General I2C error | 7200, 3207, 3214 | A4 |
| 7 | Not applicable | - | - | - |
| 8 | Not applicable | - | - | - |
| 9 | 24C16 | I2C error while communicating with the EEPROM | 7601, 3604, 3605 | A5 |
| 10 | Tuner | = I2C error while communicating with the PLL tuner | 1000, 5001 | A3 |
| 11 | TDA6107/A | Black current loop instability protection | 7330, 3351, CRT | B1 |
| 12 | SDA9488X | I2C error while communicating with the PIP processor | 7242 (PIP Module) | F1 |
| 13 | Not applicable | - | - | - |
| 14 | DVD Loader | I2C error while communicating with the DVD Interface module | DVD Interface module | DVD Loader |
| 15 | TDA9178T/N1 | I2C error while communicating with LTI module | 7610 | H |
| 16 | TDA9887 | I2C error while communicating with PIP_Demodulator | 7201 | F2 |
| 17 | Not applicable | - | - | - |
| 18 | Not applicable | - | - | - |
| 19 | TDA1200 | I2C error while communicating with SSD stereo sound decoder | 7200 | A4 |
| 20 | TDA1200 | I2C error while communicating with video cosmic in Hercules IC | 7200 | A4 |

**Note:** Errors 7, 8, 13, 17, 18 are not applicable.

## 5.6 The Blinking LED Procedure

Using this procedure, you can make the contents of the error buffer visible via the front LED. This is especially useful when there is no picture.

When the SDM is entered, the LED will blink the contents of the error-buffer:
- When all the error-codes are displayed, the sequence finishes with an 'on' LED blink of 1.5 seconds,
- The sequence starts again.

**Example** of error buffer: **12 9 6 0 0**
After entering SDM, the following occurs:
- 1 long 'on' blink of 5 seconds to start the sequence,
- 12 short blinks followed by a pause of 1.5 seconds,
- 9 short blinks followed by a pause of 1.5 seconds,
- 6 short blinks followed by a pause of 1.5 seconds,
- 1 long 'on' blink of 1.5 seconds to finish the sequence,
- The sequence starts again at 12 short blinks.

## 5.7 Protections

If a fault situation is detected, an error code will be generated; and, if necessary, the television set will go into protection mode. Blinking of the red LED at a frequency of 3 Hz indicates the protection mode. In some error cases, the microprocessor does not put the set in protection mode. The error codes of the error buffer and the blinking LED procedure can be read via the Service Default Menu (SDM), or via ComPair.
To get a quick diagnosis the chassis has three service modes implemented:
- The Customer Service Mode (CSM).
- The Service Default Mode (SDM).
- The Service Alignment Mode (SAM).

For a detailed description, see the "Customer Service Mode, Service Default mode" and "Service Alignment Mode" sections.

## 5.8 Fault Finding and Repair Tips

**Notes:**
- It is assumed that the components are mounted correctly with correct values and no bad solder joints.
- Before any fault finding actions, check if the correct options are set.

### 5.8.1 NVM Editor

In some cases, it can be handy if one directly can change the NVM contents. This can be done with the “NVM Editor” in SAM mode. In the next table, the default NVM values are given.

**Table 5-4 NVM default values**

| | Address (dec) | Value (hex) |
|---|---|---|
| EW (EW width) | 19 | 25 |
| PW (EW parabola width) | 20 | 0A |
| HS (Horizontal shift) | 21 | 1A |
| HP (Horizontal parallelogram) | 22 | 1F |
| HB (Horizontal Bow) | 23 | 1F |
| UCP (EW upper corner parabola) | 24 | 1E |
| LCP (EW lower corner parabola) | 25 | 28 |
| TC (EW trapezium) | 26 | 1A |
| VS (Vertical slope) | 27 | 25 |
| VA (Vertical amplitude) | 28 | 1E |
| SC (S-Correction) | 29 | 1C |
| VSH (Vertical Shift) | 30 | 1A |
| VX (Vertical Zoom) | 31 | 19 |
| VSL (Vertical scroll) | 32 | 20 |
| VL (Vertical linearity) | 33 | 20 |
| AGC (AGC Takeover) | 36 | 1E |
| OIF (IF-PLL Offset) | 37 | 20 |
| AGC10 (AGC 10) | 38 | 1 |
| H60 (60 Hz Horizontal Shift) | 39 | 9 |
| PF_SC_PWL (Peaking Frequency, Soft Clipper, Peak White Limit) | 40 | 0A |
| COR (Phase 1 time constant, Video Dependant Coring, Ratio & White stretch) | 41 | 0F |
| 60 Hz Vertical amplitude | 42 | 40 |
| YD & CL | 43 | 2 |
| RGB amplitude for full teletext mode | 46 | 0C |
| NVM_TABLE_VERSION | 60 | 26 |
| OPTION_TABLE_VERSION | 61 | 11 |
| CVI_BLOR | 62 | 1E |
| CVI_BLOG | 63 | 1C |
| TXT Brightness | 64 | 0F |
| V60 offset (60Hz Vertical Amplitude) | 66 | FE |
| FOAB, CHSE | 139 | 3 |
| SPR, WS | 140 | 0 |
| VMA, SVM | 141 | 31 |
| NVM_SOC_SMD | 142 | 33 |
| CCC_Preset_Gain_Red | 143 | 1F |
| CCC_Preset_Gain_Green | 144 | 1F |
| CCC_Preset_Gain_Blue | 145 | 1F |
| NVM_FMWS | 149 | 2 |
| NVM_ASD_SC1_THR | 150 | 10 |
| NVM_CRYSTAL_ALIGN | 208 | 4F |
| Last Brightness (VID PP others) | 264 | 34 |
| Last Color (VID PP others) | 265 | 2C |
| Last Contrast (VID PP others) | 266 | 4B |
| Last Sharpness (VID PP others) | 267 | 37 |
| Last Hue (VID PP others) | 268 | 32 |
| Last Colour Temperature (VID PP others) | 269 | 0D |
| White-D Cool Red | 294 | FD |
| White-D Cool Blue | 296 | 8 |
| White-D Normal Red | 297 | 22 |
| White-D Normal Green | 298 | 20 |
| White-D Normal Blue | 299 | 1B |
| White-D Warm Red | 300 | 2 |
| White-D Warm Blue | 302 | FA |
| Last Volume | 343 | 19 |
| Last Balance | 344 | 32 |
| Last Treble (AUD PP others) | 345 | 32 |
| Last Bass (AUD PP others) | 346 | 32 |

### 5.8.2 Power Supply

***Set Not Working***

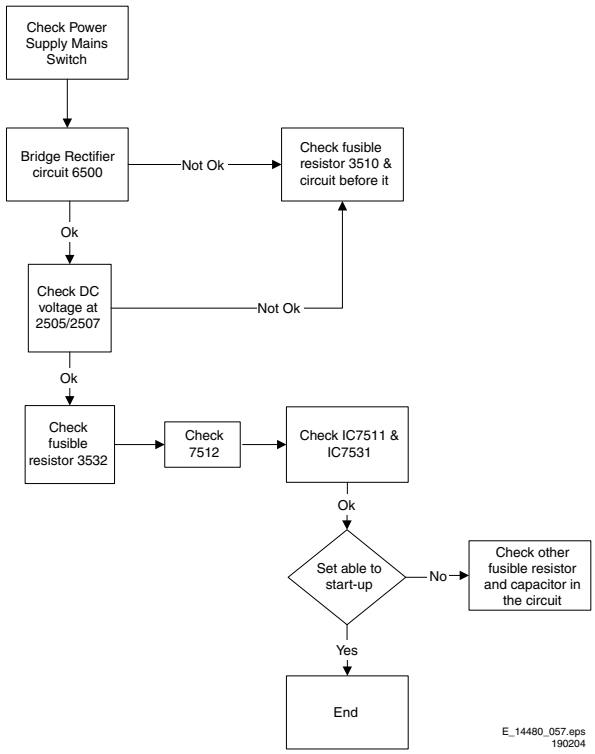


**Figure 5-5 Fault finding tree "Set not working"**

***Set Does Not Start Up***

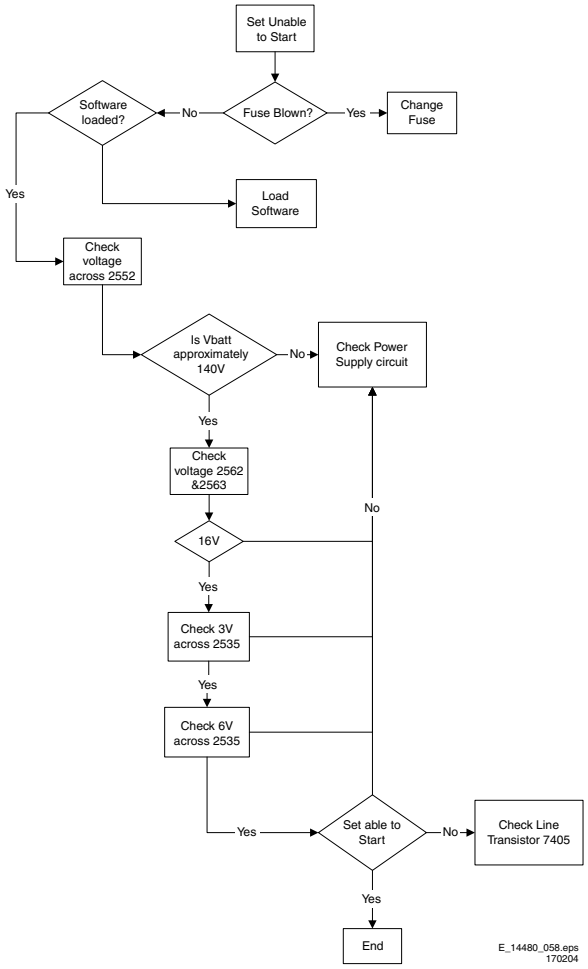


**Figure 5-6 Fault finding tree "Set does not start up"**

### 5.8.3 Deflection

***One Thin Vertical Line***

Quick check:

- Set in protection mode.
- LED blinking with error “3”.

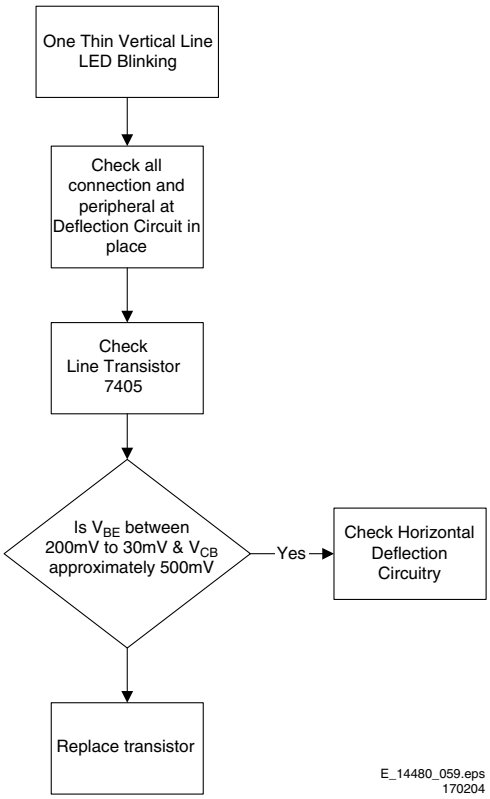


**Figure 5-7 Fault finding tree “One thin vertical line”**

***One Thin Horizontal Line***

Quick check:

- Set in protection mode.
- LED blinking with error “2”.

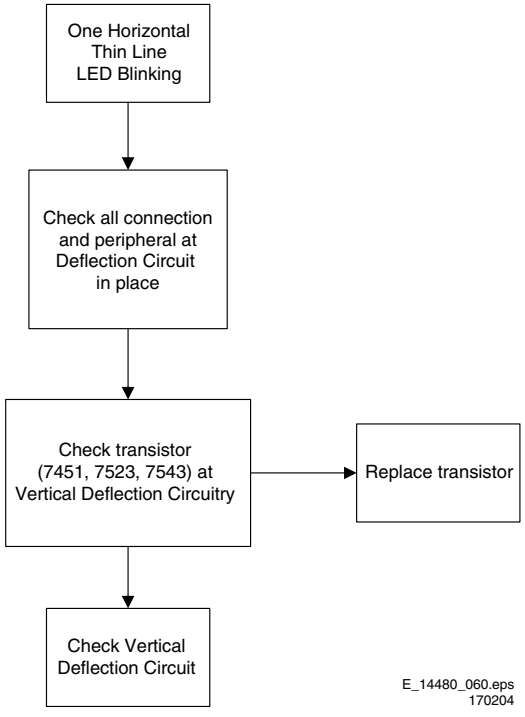


**Figure 5-8 Fault finding tree “One thin horizontal line”**

***Blank Screen***

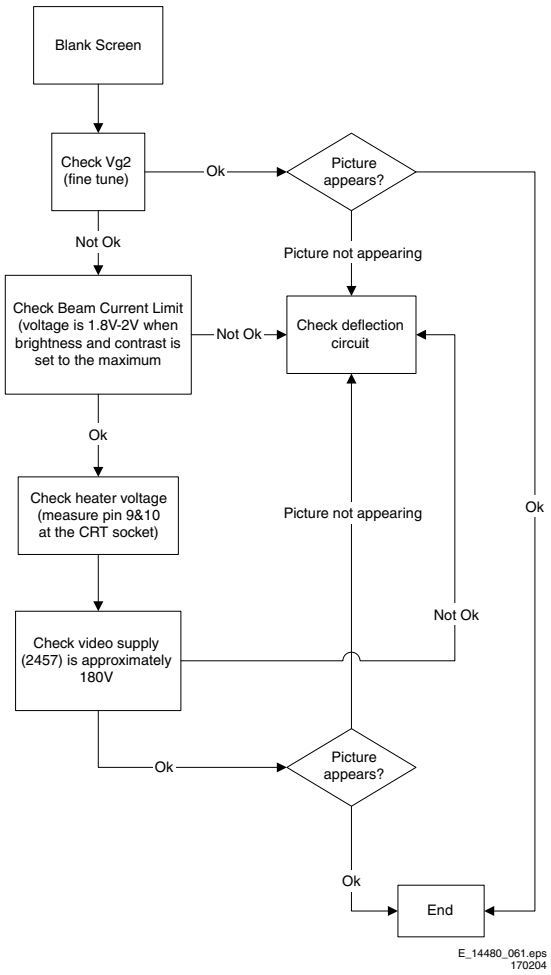


**Figure 5-9 Fault finding tree “Blank screen”**

### 5.8.4 Source Selection

***Set is not able to go into AV or any missing AV is encountered***

E.g. AV1 is available but not able to enter to AV1: Check if the option setting is correct.

***Set is able to go to AV, but no audio is heard.***

1. Check that continuity of signal is there from the SCART/ Cinch input to the input of the Hercules.
2. If continuity is there and still no audio, check that option settings are correct.
3. If logic setting is correct and still no audio, proceed to Audio Decoder/Processor troubleshooting section.

***Set is able to go into AV but no video is available:***

1. Check continuity from AV input to HERCULES depending on the input.
2. If continuity is available and yet no video, proceed to Video Processor troubleshooting section.

### 5.8.5 Tuner and IF

***No Picture***

1. Check that the Option settings are correct.
2. If correct, check that supply voltages are there.
3. If supply voltages are present, check whether picture is present in AV.
4. If picture is present in AV, check with the scope the Tuner IF output signal by manual storage to a known channel.

5. If IF output is present, Tuner is working fine. If no IF output, I2C data lines may be open, check continuity of I2C lines. If I2C lines are ok, Tuner may be defect, replaced Tuner.
6. If Tuner IF is present and yet still no picture in RF mode, go to Video Processing troubleshooting section.

***No Picture, No Sound***

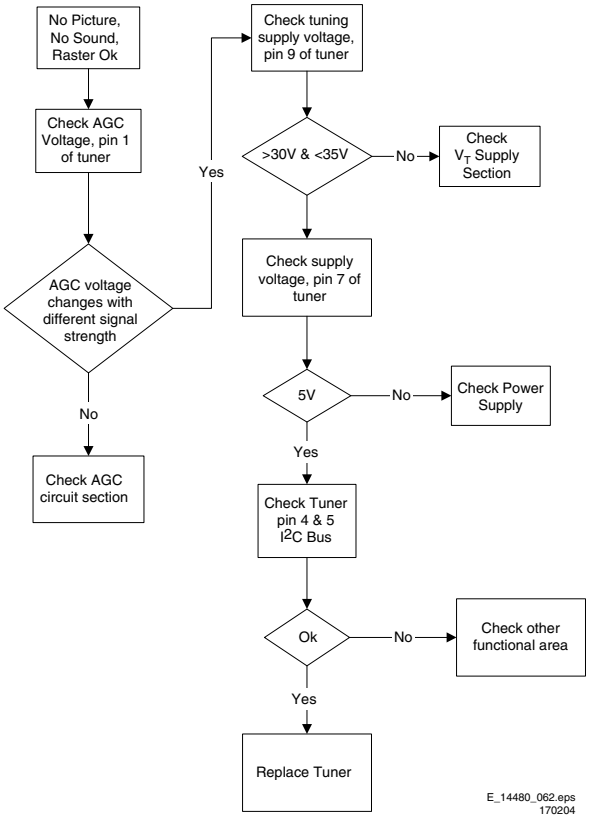


**Figure 5-10 Fault finding tree "No picture, no sound"**

***Picture Ok, No Sound***

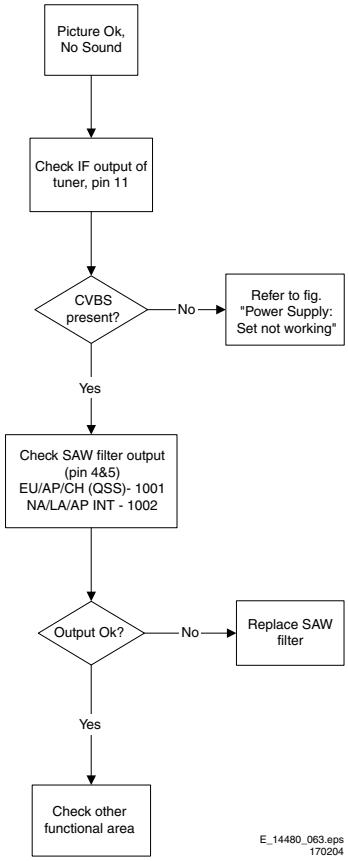


**Figure 5-11 Fault finding tree "Picture ok, no sound"**

***Unable To Perform Tuning***

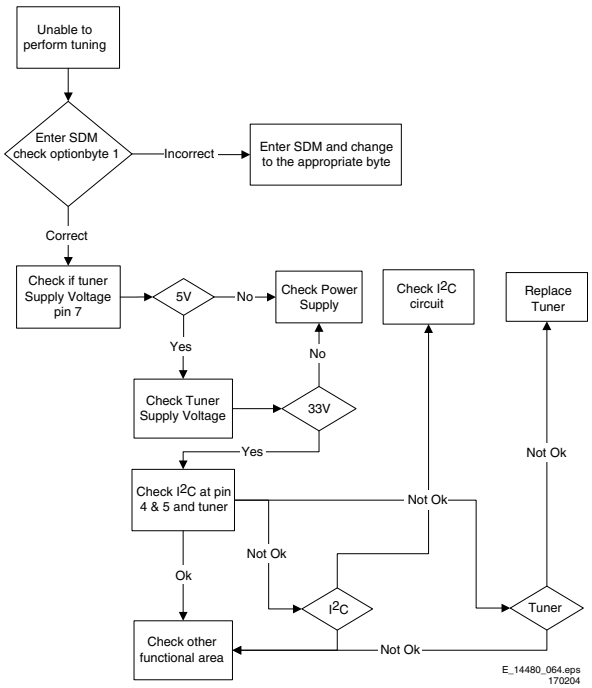


**Figure 5-12 Fault finding tree "Unable to perform tuning"**

### 5.8.6 Controller

Below are some guidelines for troubleshooting of the Micro Controller function. Normally Micro Controller should be checked when there is a problem of startup.

1. Check that both +3.3 V_dc and +1.8 V_dc are present.
2. Check that crystal oscillator is working.

3. Check that Power Good signal is at “high” logic, normal operation.
4. Check that HERCULES is not in standby mode. Pin 15 of HERCULES should be 0 V_dc.
5. Make sure H-drive pulse is there. This can be checked at resistor R3239. If H-drive does not exist, remove resistor R3239 to check if there is loading.

**Note:** When the set shuts down after a few second after power “on”, the main cause is that Vg2 not aligned properly, try adjusting Vg2 during the few seconds of power “on”.

### 5.8.7 Video Processing

***No Picture***

When “no picture in RF”, first check if the microprocessor is functioning ok in section “Controller”. If that is ok, follow the next steps.
When “no picture in AV”, first check if the video source selection is functioning ok in section “Source Selection”. If that is ok, follow the next steps.

1. Check that normal operating conditions are met.
2. Check that there is video signal at pin 81. If no video, demodulator part of the HERCULES is faulty, replace with new HERCULES.
3. If video signal is available at pin 81, check pin 56, 57, and 58 for the RGB signal.
4. If signal is not available, try checking the BRIGHTNESS and/or CONTRAST control, and make sure it is not at zero.
5. If still with the correct settings and no video is available, proceed to the CRT/RGB amplifier diagram.

For sets with TDA9178, follow steps below:
1. Put Option Byte 2 bit 4 to “0”; if video signal is not available, then check fault finding section “Controller”, Section “Source Selection”, and steps above.
2. If video is available but not correct, put Option Byte 2 bit 4 to “1”, then check if LTI panel is present. If not, put LTI panel in the main chassis (connector 1221).
3. If LTI panel is in main chassis, check cable between LTI panel and main chassis (position is 1206). If it is connected, then the LTI panel is faulty, replace it.

For sets with Scavem, and Scavem does not work, follow steps below:
1. Check Scavem coil connector (position is 1361) if connected; if not, connect it.
2. If connected, check NVM “bit storage” byte 1 bit 7; if it is not “1”, set it to “1”.
3. If it is “1”, then check the data of the NVM addresses as in the next table. If the data is not correct, then set these addresses to diagram values.
4. If it still not works, track Scavem output from pin64 of HERCULES to CRT panel.

**Table 5-5 NVM default values for Scavem**

| Description | Address (dec) | Address (hex) | Value (hex) |
|---|---|---|---|
| SPR, WS | 140 | 8C | 00 |
| VMA, SVM | 141 | 8D | 31 |
| NVM_SOC_SMD | 142 | 8E | 33 |

### 5.8.8 Audio Processing

***No Sound***

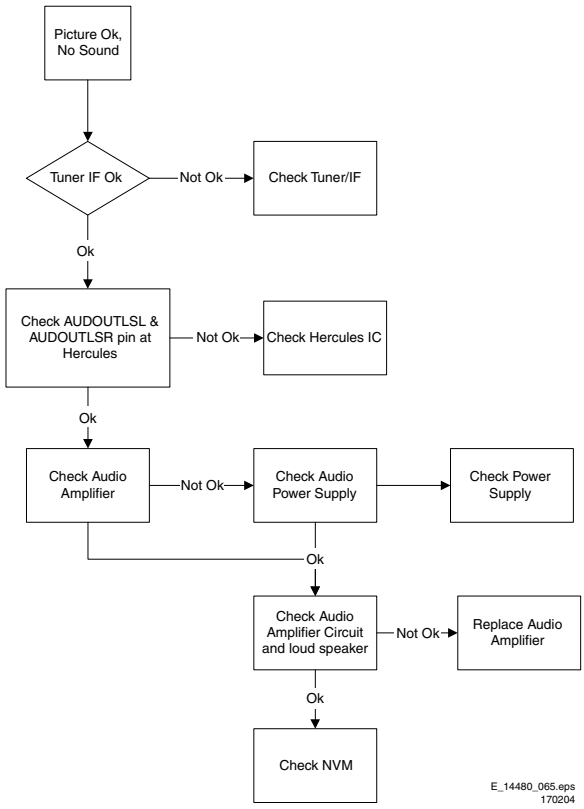


**Figure 5-13 Fault finding tree “No sound”**

***No RF audio for QSS/Inter-Carrier stereo sets.***
1. Check pin 99 and 100 for SIF signal (for QSS) or pin 104 and 105 for video with SIF (for Inter-Carrier)
2. If signal is not present, check for the QSS/FMI bit settings. Check also the NVM data.
3. If signals are present and still no audio, check the audio supply voltage +8V are present.
4. If still no audio signal at Hercules output, Hercules is faulty.

***No AV audio.***
1. Check troubleshooting methods in section “Source Selection”.
2. Check the output of the Hercules to see if there is signal available. If no, check the normal operating condition and also the NVM data.
3. If still no audio signal at Hercules output, Hercules is faulty.

**Note:** If there is audio signal at Hercules output and no audio at loudspeaker, proceed to Audio Amplifier troubleshooting methods.

### 5.8.9 Audio Amplifier

***No RF as well as AV audio at the loudspeaker:***
1. Check that the normal operation condition of the amplifier is met.
2. If normal operation conditions are met, check the continuity from Hercules output to input of the amplifier.
3. If continuity is there and still no audio, check speaker wire connections. If still no audio, amplifier IC might be faulty.

# 6. Block Diagrams, Testpoint Overviews, and Waveforms

## Wiring Diagram

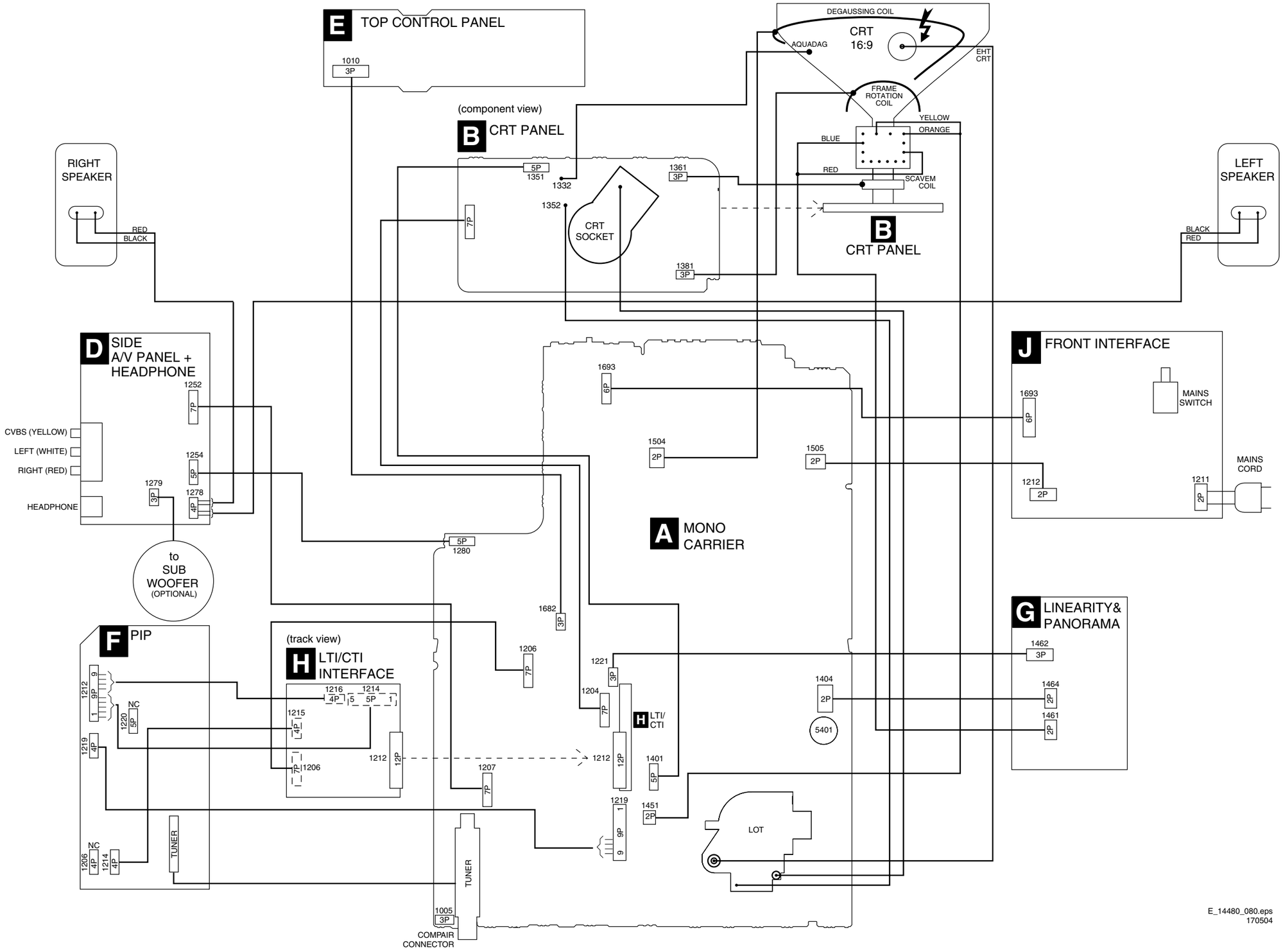


E_14480_080.eps
170504

# Block Diagram Supply and Deflection

## SUPPLY AND DEFLECTION

### SUPPLY

**J FRONT INTERFACE**

1211 1231 1212
MAINS SWITCH (not USA)

**A1 POWER SUPPLY**

1504 Degaussing Coil 3507
1505 1506 1500 T4E 5500÷5502 6500 F508 2505
MAINS SWITCH (not USA)
OR
MAIN – SUPPLY –
7511 TEA1506T DRAIN DRIVER SENSE Vcc CTRL DEMAG
CONTROL IC
I513 I516 I519 I511
3513 3514 3532 3516 3517 3518 2511 7512 7514 6511
5520 5551 6551 F552 5552 Vbatt
5562 6563 1543 F563 -Vaudio
5561 6562 6571 F561 +Vaudio
+6VA
1532 1A 3532
7515 TCET1103
7571 REFERENCE CIRCUIT
+3V3
7573 STANDBY CIRCUIT
Stdby_Con A4 I573
3571 3575 3576 6573
5531
– STANDBY – SUPPLY
7531 TEA1620 Vcc DRAIN REG SOURCE AUX
CONTROL IC
I533 I531
6512 3519 6533 3530 7532 2534 3538 6532 3534 3531
6564 6565 6566 7561 POWER-DOWN A4 2x F564 2564 3565
6535 6536 2535 2536 6676 F536 +3V +6VA +6VA +6V 5537
6537 F537 Vaux 7535 7536 I548
For IDTV only

1503 7541 ENERGIZING CIRCUIT (optional) V_DG

F508 268V / div DC
F511 15V5 / div DC
F531 2V7 / div DC
F537 0V (N.A.)
F552 130V / div DC
F561 15V9 / div DC
F564 9V4 / div DC
F573 0V (N.A.)

I513 100V / div DC 5µs / div
I516 100V / div DC 5µs / div
I519 2V / div DC 5µs / div
I533 100V / div DC 5µs / div

HOT GROUND COLD GROUND

### DEFLECTION

**A4 HERCULES**

7200-H (SYNC)
VIDEO IDENT
PHI 1 DETECTOR
HORIZONTAL OSC.
PHI 2 DETECTOR
HORIZONTAL OUTPUT
VERTICAL GUARD DETECTOR
R.G.B. BLANKING
TO RGB PROC.
2240 3222 EHTinfo A2 112 Vguard A2 113 116
HDRIVE 62
HD
7207 SANDCASTLE A5
3291 HD_PIP A5
SEE BLOCK DIAGRAM VIDEO
63
INTF_Y GREEN_IN A5 56
MAIN SYNC SEPARATOR
SAND-CASTLE GENERATOR
E/W + GEOMETRY
EW_DRIVE 108
EHTinfo A2 97 EHTo
X-RAY PROTECTION
VERTICAL SYNC SEPARATOR
VERTICAL DIVIDER
VERTICAL SAW-THOOTH
VERTICAL OUTPUT + GEOMETRY
106 VDRA
107 VDRB

**A2 LINE + FRAME DEFLECTION**

LINE
+6VA 7408 HD F412
-9V 6486 5402 7404 7405 BU4508DX F414 F418
Vbatt F402 5445 EHT I433 TO CRT B1 6401 3411 7401 ÷ 7403 7480 ÷ 7483 POWER-DOWN A1
FOCUS VG2 +Vbatt 3451 3442 6481 3481 3410 2403 EHTb + EHTinfo + BCL PROC. FRAME_FB EHTb EHTinfo A4 BCL A4
OR
LINE OUTPUT CIRCUIT + E/W CORR. 3497 1404 HOR. DEFL. COIL
E/W
+8V +8V 3420 3440 7410 7406 I417 7484 3498
7411
1454 6452 F452 +12V
Vbatt 6483 6484 F453 6453 3458 VIDEO/SUPPLY
3484 F455 FILAMENT
3485
6456 1452 +9V
3457 2456 6454 6455 3455 6459
9
FRAME
+9V 3462 F460 F461 7455 7456 7451 7454 7453 7452 3465 3466 3463 -12V
SEE BLOCK DIAGRAM VIDEO
VD A5 Vguard A4 3474 F458 1491 VER. DEFL. COIL F459 3461 FRAME_FB 3471
EHTb FILAMENT VIDEO/SUPPLY Vbatt 1401 TO 1351 B1 CRT
3401 F401 VT_SUPPLY A6

F401 130V / div DC
F402 32V8 / div DC
F412 2V / div DC 20µs / div
F414 200V / div DC 20µs / div
F418 5V / div DC 20µs / div
F452 -13V4 / div DC
F453 190V8 / div DC

F455 5V / div DC 20µs / div
F458 20 V / div DC 5ms / div
F459 1V / div DC 5ms / div
F460 500mV / div DC 5ms / div
F461 500mV / div DC 5ms / div
I416 20V / div DC 20µs / div
I417 500mV / div DC 20µs / div
I423 10V / div DC 20µs / div
I433 10V / div DC 20µs / div
I462 10V / div DC 5ms / div
I468 5V / div DC 5ms / div

**G LINEARITY & PANORAMA**

ONLY FOR:
28"WSRF LA/NA
32" WSRF LA/NA
28" WS-SF LA
7460 ACTIVATING CIRCUIT
7462
2466 2464 2467
1404 LINEARITY AND PANORAMA CORRECTION 1461 HOR. DEFL. COIL
2474 2475
1462 +9V 1463 7463
TO 1221 A5 CONNECTIONS I2SD/1

E_14480_081.eps
060504

## Testpoint Overview Mono Carrier

F001 A8 F002 A7 F003 A7 F004 A7 F005 A8 F006 A6 F007 A8 F008 A8 F009 B4 F010 A7 F011 A8 F200 B4 F201 C5 F202 B5 F203 B5 F204 C5 F205 C5 F206 C6 F207 B5 F208 B6 F209 A5 F210 A4 F211 A4 F212 A5 F213 A5 F214 B5 F215 B6 F216 C6 F217 C6 F218 C6 F219 B7 F220 B7 F221 B7 F222 C7 F223 B7 F224 C6 F225 C6 F226 B6 F227 A4 F228 C5 F229 C5 F230 B5 F232 B5 F233 B5 F237 B5 F238 B4 F239 B5 F240 C5 F241 C6 F242 B6 F243 C6 F244 B5 F245 C6 F247 A6 F248 A6 F249 A7 F250 C6 F251 B5 F270 B5 F401 C4 F402 D6 F404 D6 F407 D6 F412 C6 F414 E7 F415 E6 F416 E6 F417 E5 F418 D6 F419 D6 F420 D7 F451 C8 F452 C7 F453 D7 F454 C7 F455 D7 F456 E7 F457 E7 F458 C7 F459 C7 F460 C7 F461 C7 F462 E7 F463 D8 F464 E5 F465 E5 F466 E8 F500 C2 F501 D2 F502 D2 F503 D7 F504 E2 F505 E2 F506 E2 F507 E3 F508 E3 F509 E4 F510 D5 F535 C4 F536 C5 F537 C3 F541 C3 F542 C3 F551 C5 F552 D5 F561 C4 F562 D4 F563 C4 F564 C5 F573 C5 F581 B3 F582 B4 F583 C4 F682 B1 F683 B1 F685 B1 F691 C1 F692 D1 F693 E1 F694 C1 F695 C1 F696 D1 F697 E1 F698 C1 F699 D1 F701 C8 F702 C8 F703 C8 F704 C8 F705 B8 F706 C8 F707 B8 F708 B8 F709 B8 F710 B8 F711 C8 F712 B8 F713 B8 F714 B8 F715 B7 F716 A8 F717 A8 F718 A8 F719 B8 F731 C8 F732 C8 F733 C8 F734 C8 F735 B8 F736 B7 F738 B7 F739 B8 F751 A7 F752 A7 F901 B3 F903 B2 F904 B1 F905 B2 F910 B3 F911 B3 F950 B3 F951 B3 F952 A3 F953 A3 F955 A3 I001 A8 I002 A8 I003 A7 I004 A7 I005 A5 I006 A5 I007 A7 I008 A5 I009 A5 I010 A5 I011 A7 I012 A7 I013 A6 I014 A8 I015 A8 I016 A7 I017 B5 I201 A5 I203 A5 I204 A5 I205 A5 I206 A5 I207 B6 I208 C5 I209 B6 I210 B6 I211 B6 I212 B6 I213 A5 I214 A5 I215 A6 I216 B6 I217 B7 I218 B6 I219 B6 I222 B5 I223 B5 I224 B4 I225 B5 I227 A5 I228 B5 I229 C5 I230 B5 I231 B5 I232 A7 I233 B7 I234 A4 I235 B5 I236 B5 I240 A4 I241 A4 I401 E7 I402 E6 I403 E7 I404 E7 I405 E7 I406 E7 I407 E8 I409 E8 I410 E6 I412 E6 I413 C6 I414 D6 I415 C6 I416 C5 I417 D5 I418 D6 I419 C6 I421 D7 I422 D7 I423 D5 I424 E8 I425 C6 I426 D7 I427 D5 I428 D6 I429 E8 I430 E6 I431 C7 I432 D6 I433 E6 I434 C5 I443 E7 I444 E7 I445 E7 I446 C5 I448 E7 I449 D8 I451 D7 I452 E8 I453 D7 I455 D7 I456 D8 I457 D7 I458 D7 I459 D7 I460 C8 I461 C8 I462 C8 I463 D8 I464 C8 I465 E7 I466 D7 I467 E8 I468 D7 I469 E8 I470 D8 I471 C8 I472 C7 I473 E5 I474 E6 I475 D8 I501 E3 I502 E3 I503 E2 I504 E2 I505 D1 I506 E3 I507 D3 I511 E5 I513 E5 I514 D4 I515 E4 I516 E4 I517 E4 I518 E5 I519 E5 I520 E5 I521 E4 I523 E5 I524 E5 I527 E5 I529 D3 I531 D3 I532 D3 I533 D3 I535 D3 I536 D3 I537 C4 I538 C3 I539 D3 I540 D4 I541 D4 I542 C3 I543 C2 I544 D3 I545 C3 I546 C3 I547 C3 I548 C3 I551 D5 I552 D5 I553 D3 I554 D4 I555 D4 I556 D4 I557 D3 I561 D4 I562 D4 I565 C4 I571 D5 I572 C5 I573 D5 I574 D5 I575 D5 I576 D5 I577 D5 I578 D5 I579 D4 I582 B4 I583 B4 I584 B4 I585 B4 I587 C4 I588 B4 I681 E1 I682 B1 I683 C1 I686 C1 I687 D1 I688 C1 I689 D1 I691 E1 I693 D1 I701 C7 I702 C8 I704 C8 I705 B8 I707 C8 I709 B7 I710 B7 I711 B8 I713 A7 I714 B7 I715 C7 I716 C8 I717 C7 I718 C7 I719 B7 I720 A7 I721 B8 I722 B7 I727 A7 I728 B7 I729 C7 I730 C7 I731 C7 I732 B7 I733 B7 I734 C7 I735 B7 I736 B7 I739 B7 I909 B3 I910 C3 I911 C3 I913 C3 I914 C2 I915 C3 I916 C2 I918 C3 I919 C2 I920 B3 I921 C2 I922 C2 I924 B3 I925 B3 I926 B2 I927 C2 I928 B1 I930 C2 I934 B2 I935 B1 I936 B2 I937 C2 I938 B2 I939 B2 I940 B2 I941 B2 I942 C3 I943 B2 I944 C3 I945 C2 I946 B3 I948 B3 I951 B3 I952 A3 I953 A3 I954 A3 I955 B3 I956 A3 I957 A3 I958 B4 I959 B4

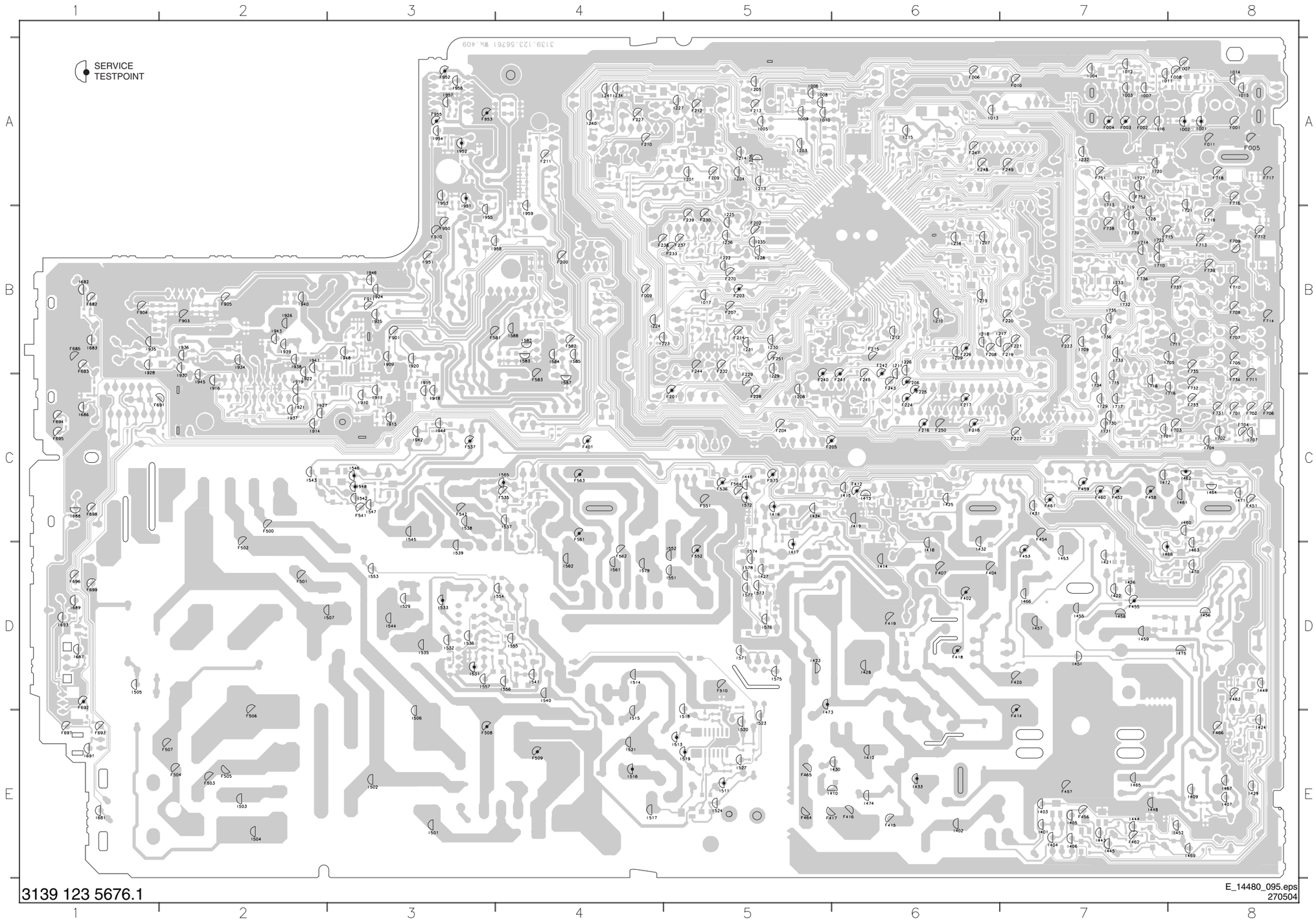

# Block Diagram Video

## VIDEO

### PIP

F2 PIP TUNER IF — MULTISTANDARD VIDEO DEMODULATION

F1 PIP-PROC.

H LTI/CTI

A5 CONN.

A5 CONN.

A4 HERCULES

A4 TUNER IF

A2 VT_SUPPLY

7200-A (IF)

7200-B (CVBS I/O + FILTERS + COLOUR DECODING)

7200-C INPUT SWITCHING

DIGITAL SIGNAL PROC.
- 4:3 LINEAR/NON-LINEAR SCALING
- DOUBLE WINDOW PROC.

A8 REAR I/O SCART (VIDEO PART)

D SIDE AV

A5 CONNECTION

F201 2V / div DC
F203 2V / div DC

F205 500mV / div DC 10ms / div
F206 1V / div DC 20µs / div
F240 500mV / div DC 20µs / div
F241 500mV / div DC 20µs / div
F242 500mV / div DC 20µs / div
F331 500mV / div DC 20µs / div
F332 500mV / div DC 20µs / div
F333 500mV / div DC 20µs / div

F216 1V / div DC 20us / div
F217 1V / div DC 20us / div
F218 1V / div DC 20us / div
F224 500mV / div DC 20us / div
F225 500mV / div DC 20us / div
F226 500mV / div DC 20us / div
F338 50V / div DC 20us / div
F339 50V / div DC 20us / div
F341 50V / div DC 20us / div

A4 HERCULES

7200-D (YUV PROCESSING)

7200-E (RGB PROCESSING + CATHODE CALIBRATION)

B1 CRT

B2 SCAVEM

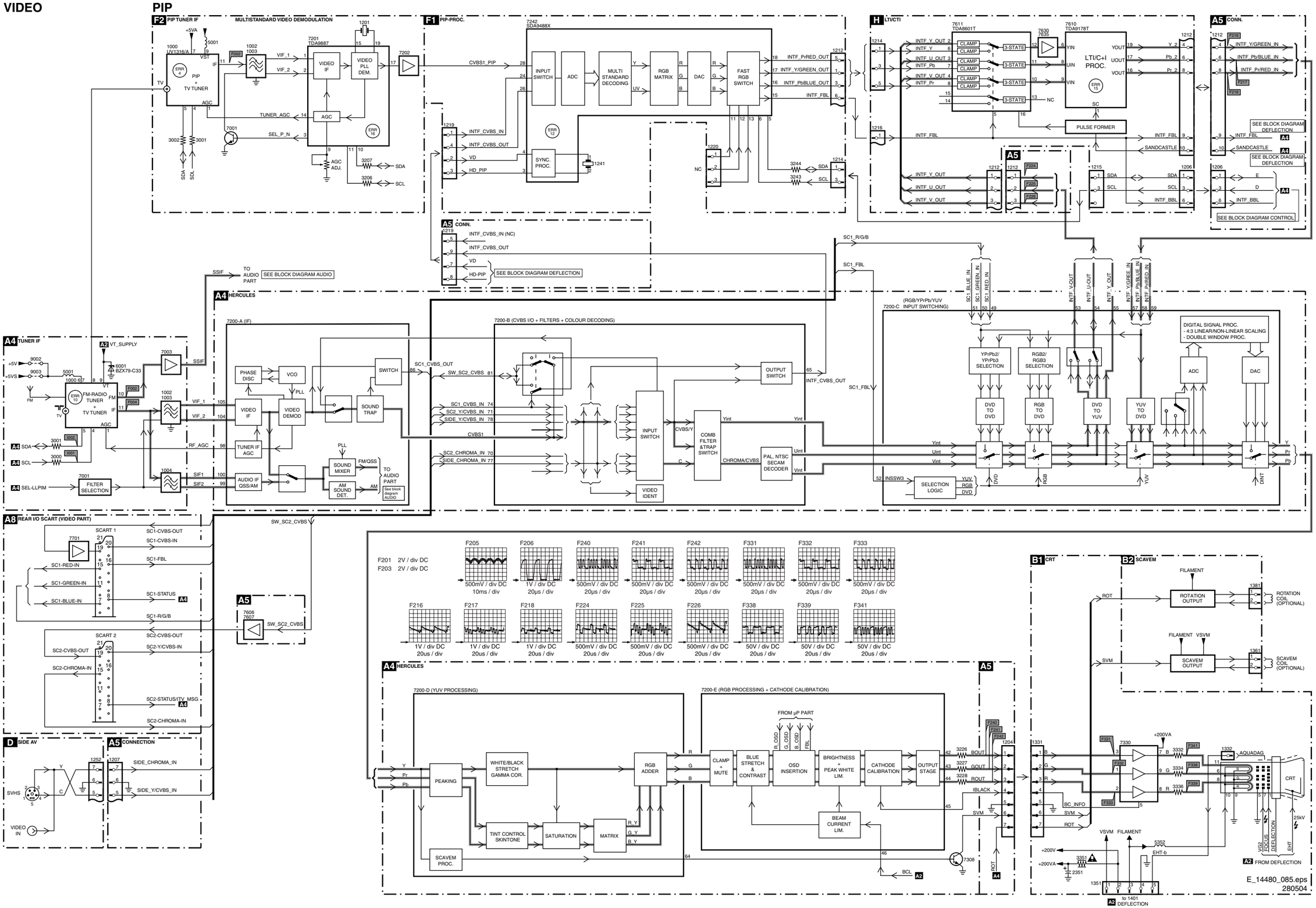

## Testpoint Overview CRT, LTI & PIP Panel

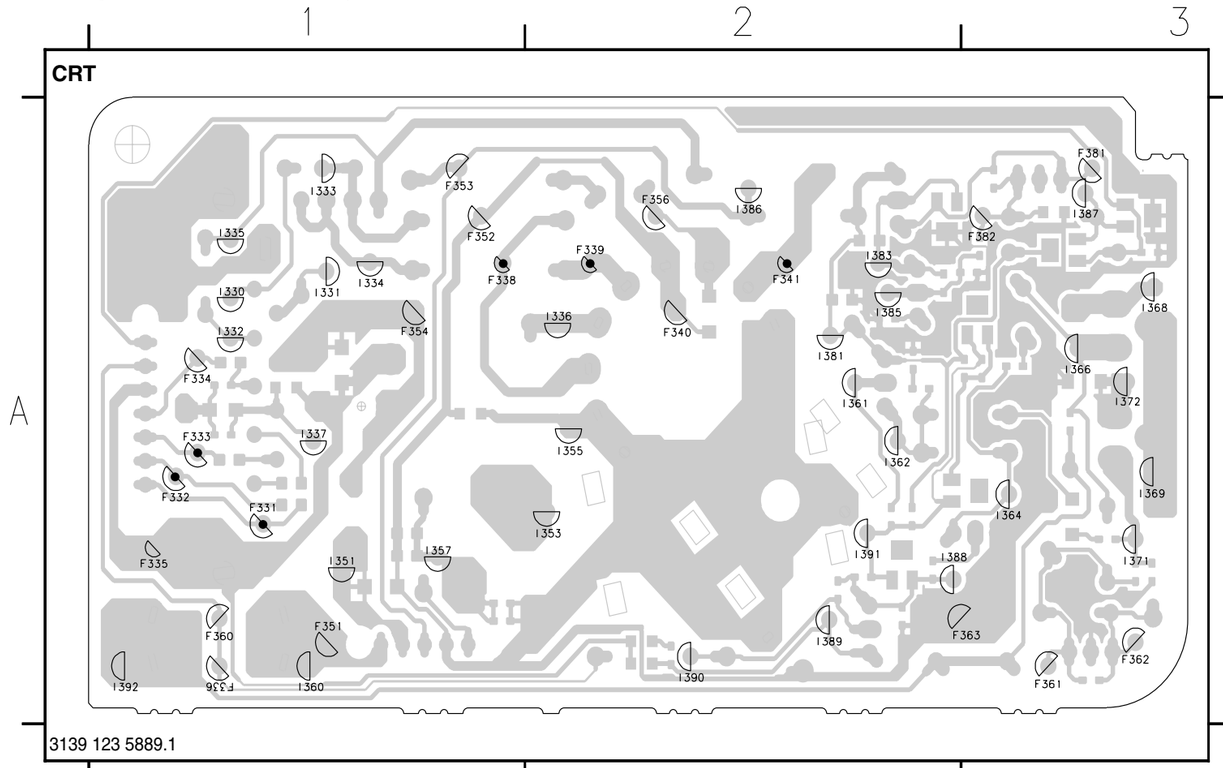


F331 A1
F332 A1
F333 A1
F334 A1
F335 A1
F336 A1
F338 A1
F339 A2
F340 A2
F341 A2
F351 A1
F352 A1
F353 A1
F354 A1
F356 A2
F360 A1
F361 A3
F362 A3
F363 A3
F381 A3
F382 A3
I330 A1
I331 A1
I332 A1
I333 A1
I334 A1
I335 A1
I336 A2
I337 A1
I351 A1
I353 A2
I355 A2
I357 A1
I360 A1
I361 A2
I362 A2
I364 A3
I366 A3
I368 A3
I369 A3
I371 A3
I372 A3
I381 A2
I383 A2
I385 A2
I386 A2
I387 A3
I388 A2
I389 A2
I390 A2
I391 A2
I392 A1

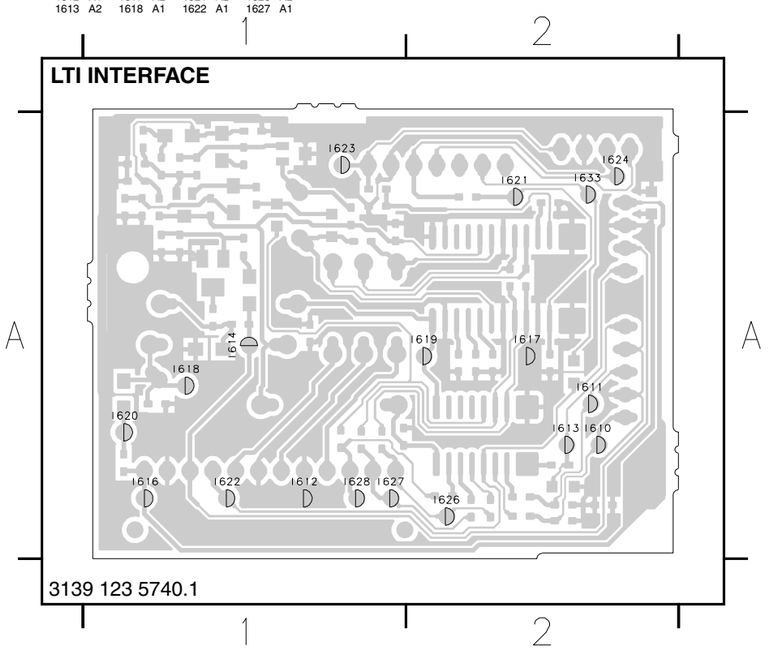


I610 A2 I614 A1 I619 A2 I623 A1 I628 A1
I611 A2 I616 A1 I620 A1 I624 A2 I633 A2
I612 A1 I617 A2 I621 A2 I626 A2
I613 A2 I618 A1 I622 A1 I627 A1

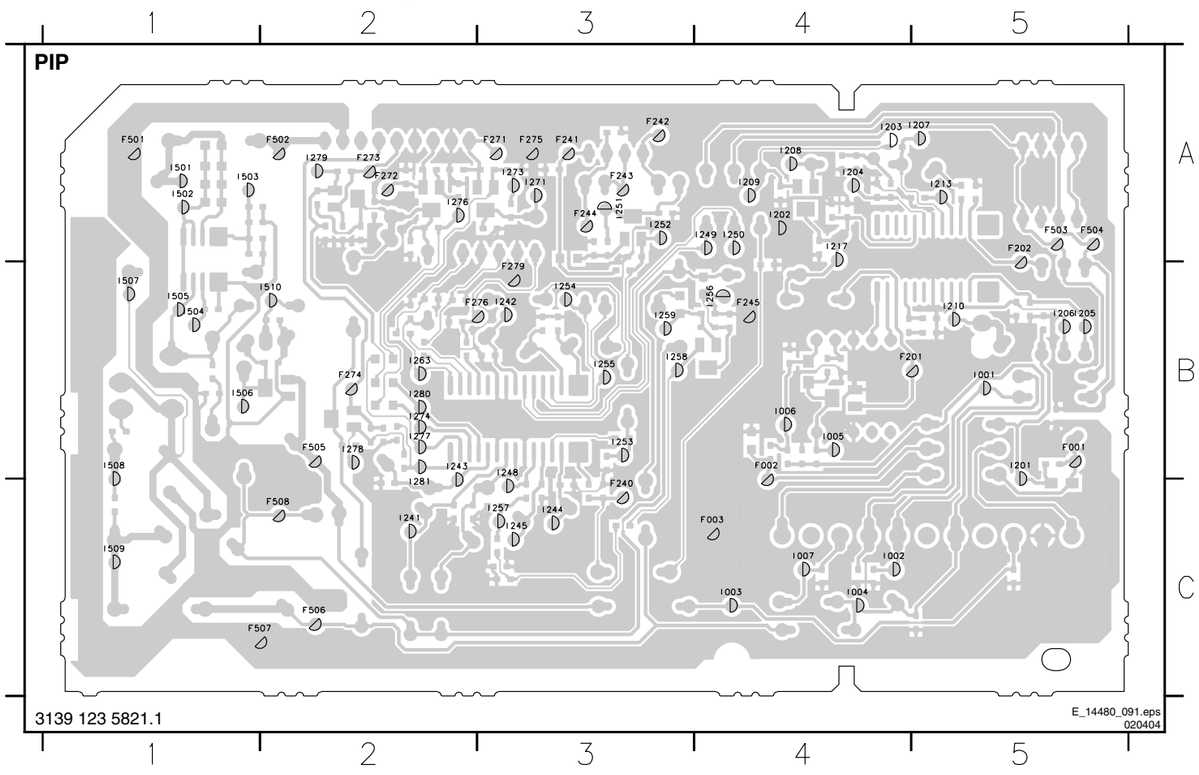


F001 B5 I254 B3
F002 B4 I255 B3
F003 C4 I256 B4
F201 B4 I257 C3
F202 A5 I258 B3
F240 C3 I259 B3
F241 A3 I263 B2
F242 A3 I271 A3
F243 A3 I273 A3
F244 A3 I274 B2
F245 B4 I276 A2
F271 A3 I277 B2
F272 A2 I278 B2
F273 A2 I279 A2
F274 B2 I280 B2
F275 A3 I281 C2
F276 B2 I501 A1
F279 B3 I502 A1
F501 A1 I503 A1
F502 A2 I504 B1
F503 A5 I505 B1
F504 A5 I506 B1
F505 B2 I507 B1
F506 C2 I508 B1
F507 C1
F508 C2
I001 B5
I002 C4
I003 C4
I004 C4
I005 B4
I006 B4
I007 C4
I201 B5
I202 A4
I203 A4
I204 A4
I205 B5
I206 B5
I207 A5
I208 A4
I209 A4
I210 B5
I213 A5
I217 A4
I241 C2
I242 B3
I243 B2
I244 C3
I245 C3
I248 B3
I249 A4
I250 A4
I251 A3
I252 A3
I253 B3

# Block Diagram Audio/Control

## AUDIO

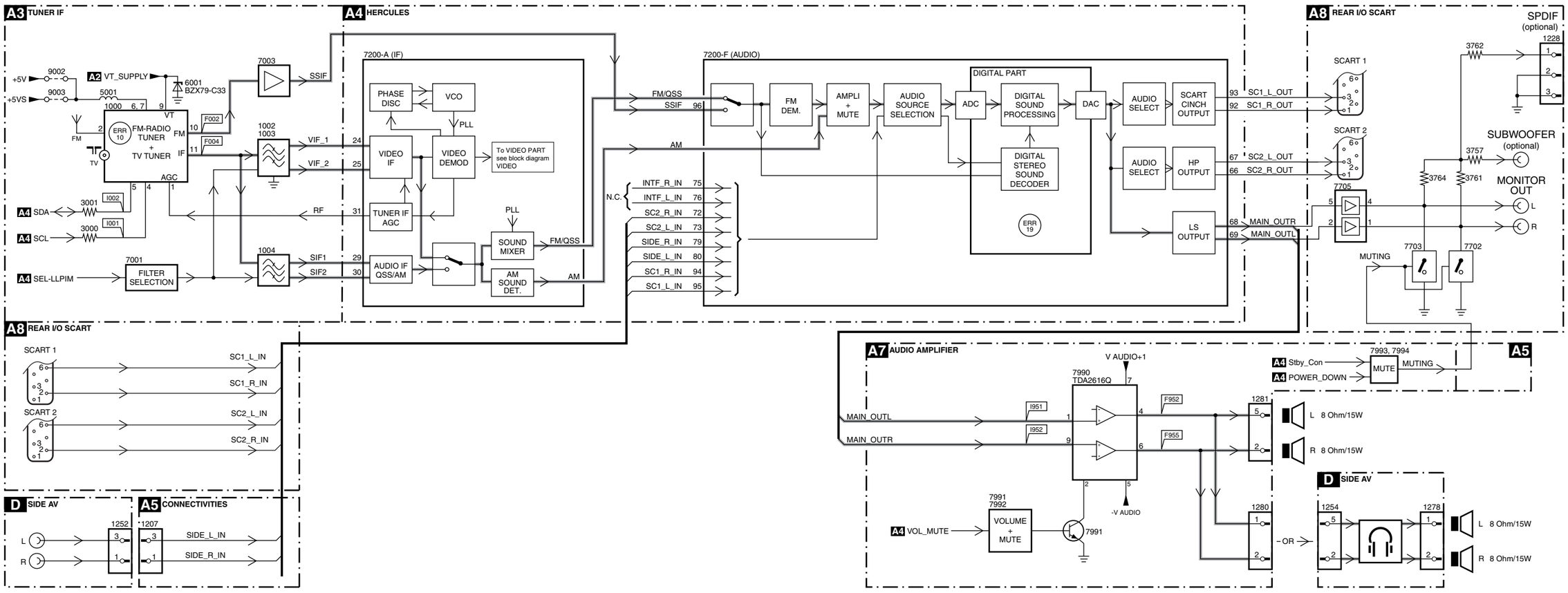


## CONTROL

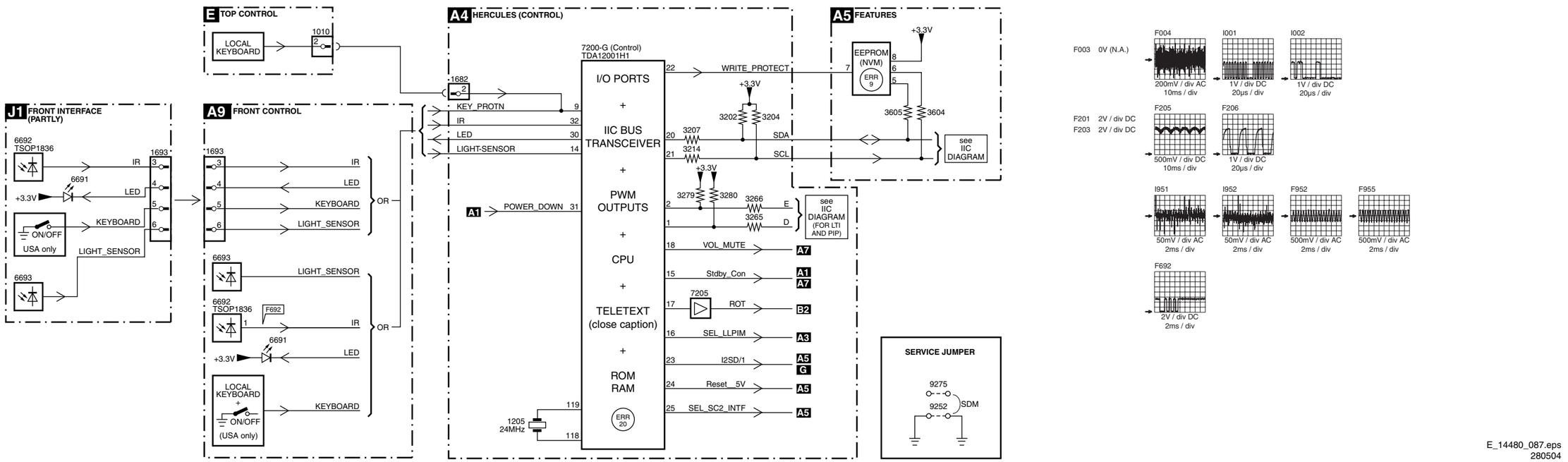





E_14480_087.eps
280504

# I2C and Supply Voltage Overview

## SUPPLY LINES DIAGRAM

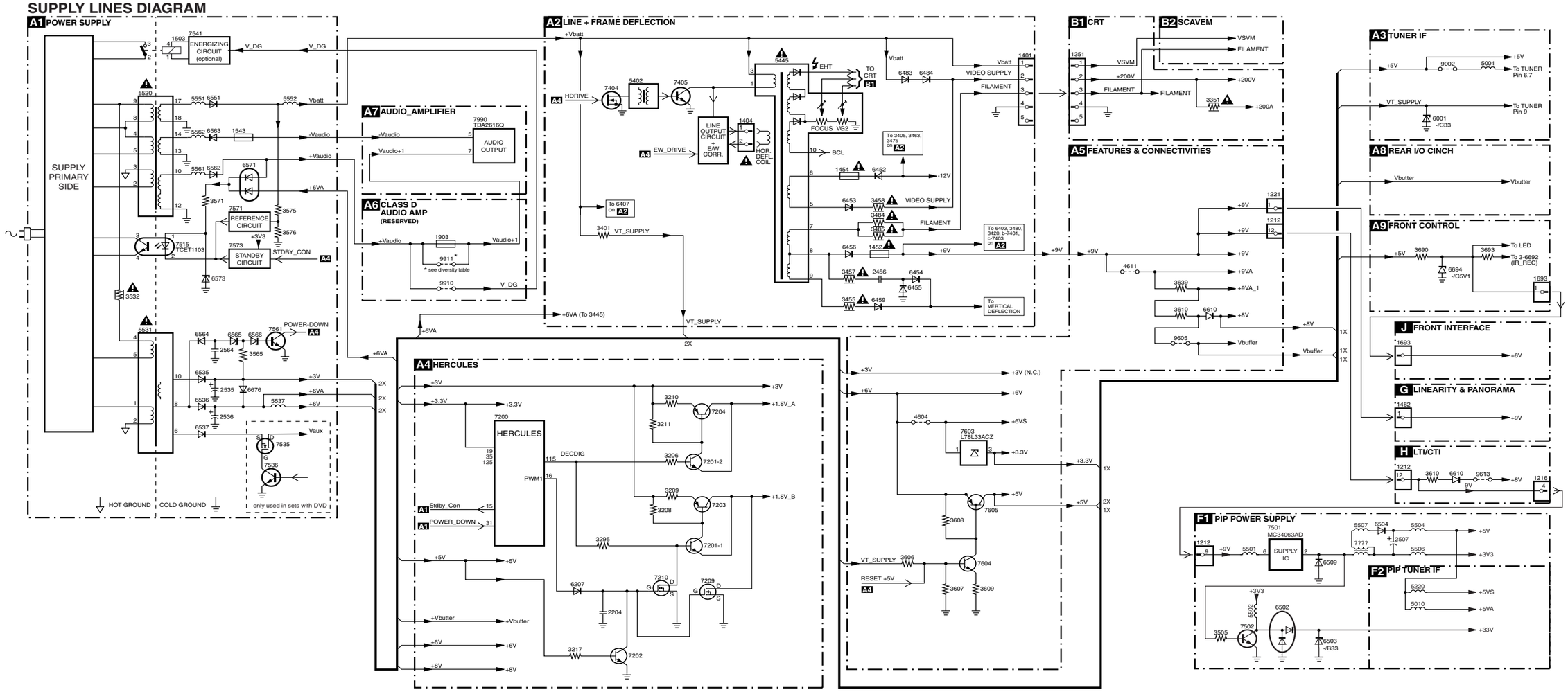


## I2C BUS INTERCONNECTION DIAGRAM

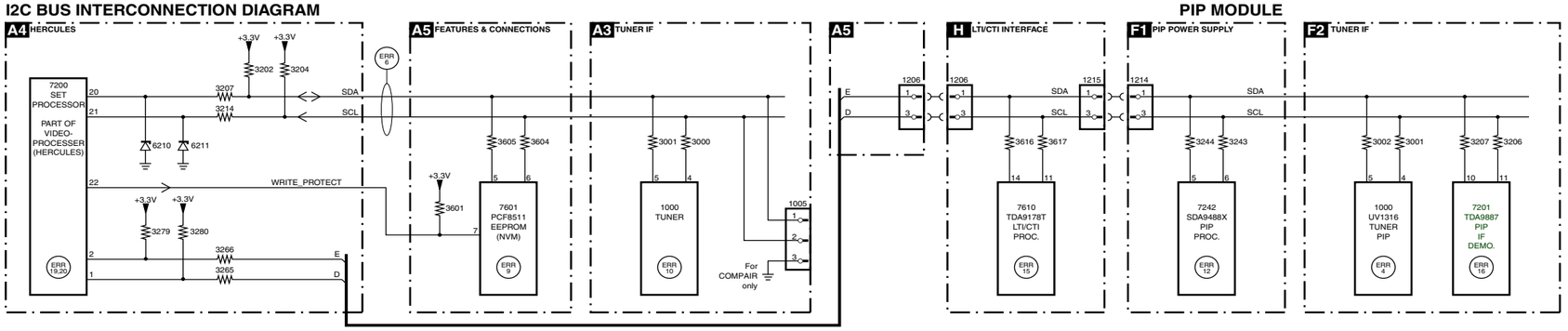


## ERROR CODE LIST

| ERROR | Device | Error description | Check item | Diagram |
|---|---|---|---|---|
| 0 | Not applicable | No Error | | |
| 1 | Not applicable | X-Ray / over-voltage protection (US only) | 2411, 2412, 2413, 6404, 6411, 6412. | A2 |
| 2 | Not applicable | High beam (BCI) protection | 3404, 7405 | A2 |
| 3 | Not applicable | Vertical guard protection | 3466, 7451, 7452, 7453, 7454 | A2 |
| 4 | Tuner UA1316/A | I²C error while communicating with 2nd tuner | 1000, 5010 (PIP Module) | F2 |
| 5 | Not applicable | +5v protection | 7604, 7605 | A5 |
| 6 | I2C bus | General I²C error | 7200, 3207, 3214 | A4 |
| 7 | Not applicable | - | - | - |
| 8 | Not applicable | - | - | - |
| 9 | 24C16 | I²C error while communicating with the EEPROM | 7601, 3604, 3605 | A5 |
| 10 | Tuner | = I²C error while communicating with the PLL tuner | 1000, 5001 | A3 |
| 11 | TDA6107/A | Black current loop instability protection | 7330, 3351, CRT | B1 |
| 12 | SDA9488X | I²C error while communicating with the PIP processor | 7242 (PIP Module) | F1 |
| 13 | Not applicable | - | - | - |
| 14 | DVD Loader | I2C error while communicating with the DVD Interface module | DVD Interface module | DVD Loader |
| 15 | TDA9178T/N1 | I2C error while communicating with LTI module | 7610 | H |
| 16 | TDA9887 | I2C error while communicating with PIP Demodulator | 7201 | F2 |
| 17 | Not applicable | - | - | - |
| 18 | Not applicable | - | - | - |
| 19 | TDA1200 | I2C error while communicating with SSD stereo sound decoder | 7200 | A4 |
| 20 | TDA1200 | I2C error while communicating with video cosmic in Hercules IC | 7200 | A4 |

E_14480_084.eps
060504

# 7. Circuit Diagrams and PWB Layouts

## Mono Carrier: Power Supply

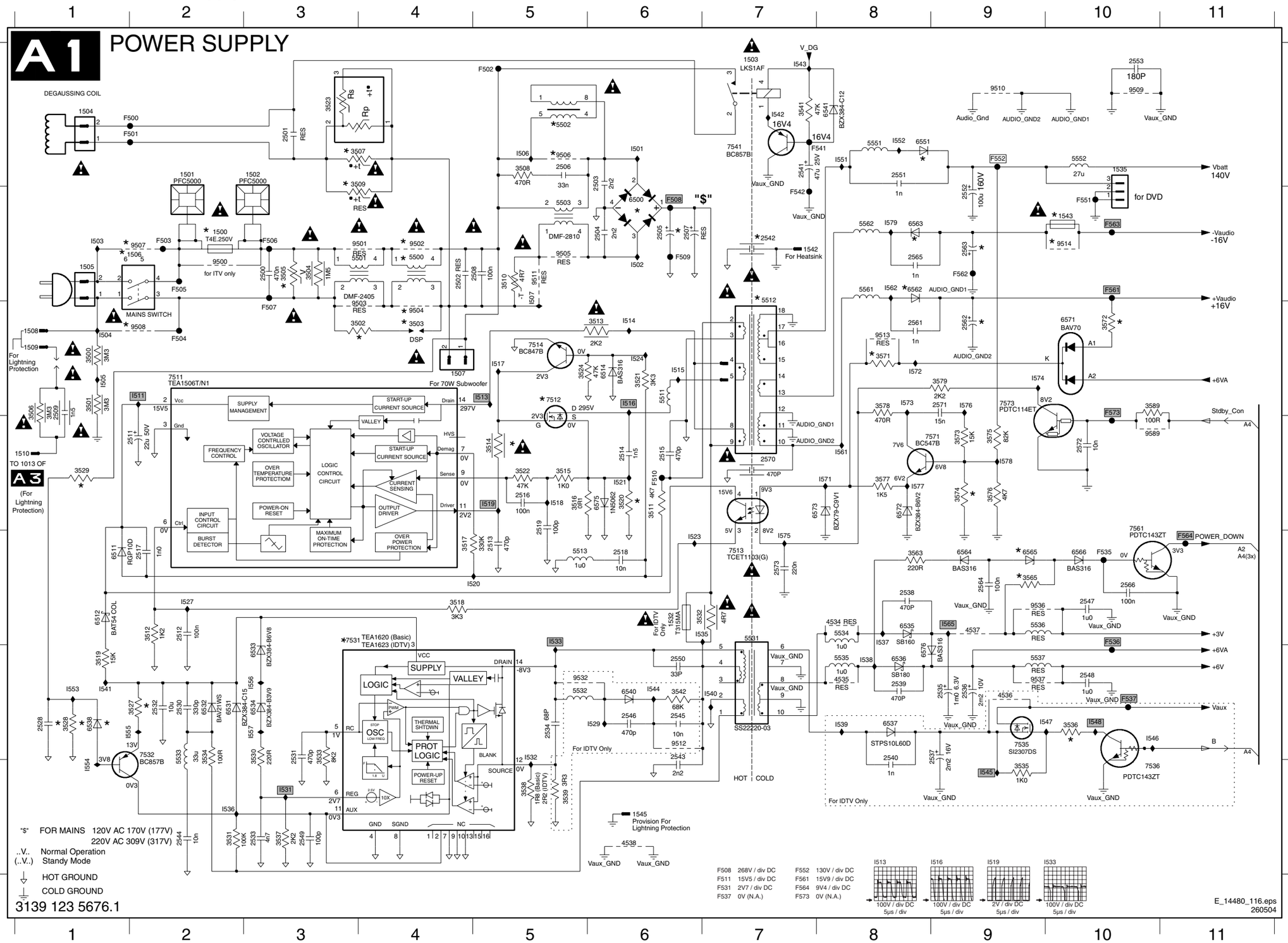


| | | | | | |
|---|---|---|---|---|---|
| F508 | 268V / div DC | F552 | 130V / div DC | I513 | 100V / div DC, 5µs / div |
| F511 | 15V5 / div DC | F561 | 15V9 / div DC | I516 | 100V / div DC, 5µs / div |
| F531 | 2V7 / div DC | F564 | 9V4 / div DC | I519 | 2V / div DC, 5µs / div |
| F537 | 0V (N.A.) | F573 | 0V (N.A.) | I533 | 100V / div DC, 5µs / div |


1500 B2 3575 D9 I513 C5
1501 A2 3576 D9 I514 C6
1502 A3 3577 D8 I515 C5
1503 A7 3578 C8 I516 C6
1504 A1 3579 C9 I517 C5
1505 B1 3589 C10 I518 D5
1506 B1 4534 E8 I519 D5
1507 C4 4535 F8 I520 E5
1508 C1 4536 F9 I521 D6
1509 C1 4537 E9 I523 E6
1510 D1 4538 G6 I524 C6
1532 E6 5500 B4 I527 E2
1535 A10 5501 B4 I529 F6
1542 B8 5502 A5 I531 G3
1543 B10 5503 B5 I532 F5
1545 G6 5511 C6 I533 E5
2500 B3 5512 C7 I535 E6
2501 A3 5513 E5 I536 G2
2502 B4 5531 E7 I537 E8
2503 A6 5532 F5 I538 F8
2504 B6 5533 F2 I539 F8
2505 B6 5534 E8 I540 F7
2506 A5 5535 F8 I541 F1
2507 B6 5536 E9 I542 A7
2508 B5 5537 F9 I543 A7
2509 C1 5551 A8 I544 F6
2511 D2 5552 A10 I545 G9
2512 E2 5561 B8 I546 F10
2513 E5 5562 B8 I547 F10
2514 D6 6500 B6 I548 F10
2515 D6 6511 E1 I551 A8
2516 D5 6512 E1 I552 A8
2517 E2 6514 C6 I553 F1
2518 E6 6531 F2 I554 G1
2519 D5 6532 F2 I555 F1
2528 F1 6533 F3 I556 F3
2530 F2 6534 F3 I557 F3
2531 F3 6535 E8 I561 D8
2532 F2 6536 F8 I562 B8
2533 G3 6537 F8 I565 E9
2534 F5 6538 F1 I571 D8
2535 F9 6540 F6 I572 C8
2536 F9 6541 A8 I573 C8
2537 F9 6551 A8 I574 C9
2538 E8 6562 B8 I575 E7
2539 F8 6563 B8 I576 C9
2540 G8 6564 E9 I577 D8
2541 A7 6565 E9 I578 D9
2542 B7 6566 E10 I579 B8
2543 F6 6571 C10
2544 G2 6572 D8
2545 F6 6573 D8
2546 F6 6575 D6
2547 E10 6576 F8
2548 F10 7511 C2
2549 G3 7512 C5
2550 F6 7513 E7
2551 A8 7514 C5
2552 B9 7531 E3
2553 A10 7532 F2
2561 C8 7535 F9
2562 C9 7536 G10
2563 B9 7541 A7
2564 E9 7561 E10
2565 B8 7571 D9
2566 E10 7573 C9
2570 D7 9500 B2
2571 C9 9501 B4
2572 D10 9502 B4
2573 E7 9503 C4
3500 C1 9504 C4
3501 C1 9505 B5
3502 C4 9506 A5
3503 C4 9507 B2
3504 B3 9508 C2
3505 B3 9509 A10
3506 C1 9510 A9
3507 A4 9511 B5
3508 A5 9512 F6
3509 A4 9513 C8
3510 B5 9514 B10
3511 D6 9532 F5
3512 E2 9536 E9
3513 C6 9537 F9
3514 D5 9589 D10
3515 D5 F500 A2
3516 D5 F501 A2
3517 E4 F502 A5
3518 E4 F503 B2
3519 F1 F504 C2
3520 D6 F505 B2
3521 C6 F506 B3
3522 D5 F507 C3
3523 A3 F508 B6
3524 C5 F509 B6
3527 F2 F510 D6
3528 F1 F535 E10
3529 D1 F536 E10
3530 F3 F537 F10
3531 G2 F541 A8
3532 E6 F542 B7
3533 F3 F551 B10
3534 F2 F552 A9
3535 G9 F561 B10
3536 F10 F562 B9
3537 G3 F563 B10
3538 G5 F564 E11
3539 G5 F573 C10
3541 A7 I501 A6
3542 F6 I502 B6
3563 E8 I503 B1
3565 E9 I504 C1
3571 C8 I505 C1
3572 C10 I506 A5
3573 D9 I507 B5
3574 D9 I511 C2

## Mono Carrier: Diversity Table for A1 (Power Supply)

# DIVERSITY TABLE FOR A 1 POWER SUPPLY

| REGION | NAFTA | | | LATAM / AP | | | | | | CHINA | | | INDIA | | EUROPE | | | | | |
|---|---|---|---|---|---|---|---|---|---|---|---|---|---|---|---|---|---|---|---|---|
| MAIN RANGE | LR | | | FR | | | | | | HR | | | HR | | HR | | | | | |
| SET | 27RF 27FSQ | 32RF | 26WSRF 30WSRF 32FSQ | 21RF | 25RF 29FSQ | 29RF | 29RF | 28WSSF | 28WSRF 32WSRF | 21/25RF | 29RF | 34RF | 21/29RF | 21/29RF 29FSQ | 21RF | 29RF 28WSSF | 29RF | 24WR 25/28BLD | 28WSRF | 32WSRF |
| VBATT | 130V | 130V | 143V | 130V | 130V | 130V | 130V | 143V | 143V | 130V | 130V | 130V | 130V | 130V | 130V | 130V | 130V | 143V | 143V | 143V |
| AUDIO OUTPUT | 2X5W 2X10W | 2X5W 2X10W | 2X5W 2X10W | 2X10W | 2X5W 2X10W | 2X5W | 2X10W | 2X5W | 2X10W | 2X10W | 2X5W 2X10W | 2X10W | 2X5W 2X10+20W | 2X15W | 2X5W 2X10W | 2X5W | 2X10W | 2X5W 2X10W | 2X5W 2X10W | 2X5W 2X10W |
| 1508 | --- | --- | --- | WIRE SIN 180 SIN 18ST BK | WIRE SIN 180 SIN 18ST BK | WIRE SIN 180 SIN 18ST BK | WIRE SIN 180 SIN 18ST BK | WIRE SIN 180 SIN 18ST BK | WIRE SIN 180 SIN 18ST BK | WIRE SIN 180 SIN 18ST BK | WIRE SIN 180 SIN 18ST BK | WIRE SIN 180 SIN 18ST BK | WIRE SIN 180 SIN 18ST BK | WIRE SIN 180 SIN 18ST BK | WIRE SIN 180 SIN 18ST BK | WIRE SIN 180 SIN 18ST BK | WIRE SIN 180 SIN 18ST BK | WIRE SIN 180 SIN 18ST BK | WIRE SIN 180 SIN 18ST BK | WIRE SIN 180 SIN 18ST BK |
| 1510 | --- | --- | --- | WIRE SIN 400 SIN 18ST BK | WIRE SIN 400 SIN 18ST BK | WIRE SIN 400 SIN 18ST BK | WIRE SIN 400 SIN 18ST BK | WIRE SIN 400 SIN 18ST BK | WIRE SIN 400 SIN 18ST BK | WIRE SIN 400 SIN 18ST BK | WIRE SIN 400 SIN 18ST BK | WIRE SIN 400 SIN 18ST BK | WIRE SIN 400 SIN 18ST BK | WIRE SIN 400 SIN 18ST BK | WIRE SIN 400 SIN 18ST BK | WIRE SIN 400 SIN 18ST BK | WIRE SIN 400 SIN 18ST BK | WIRE SIN 400 SIN 18ST BK | WIRE SIN 400 SIN 18ST BK | WIRE SIN 400 SIN 18ST BK |
| 2505 | 200V 470U | 200V 470U | 200V 470U | 400V 330U | 400V 330U | 400V 330U | 400V 330U | 400V 330U | 400V 330U | 450V 220U | 450V 220U | 450V 220U | 450V 220U | 450V 220U | 400V 220U | 400V 220U | 400V 220U | 400V 220U | 400V 220U | 400V 220U |
| 2506 | --- | --- | --- | --- | --- | --- | --- | --- | --- | --- | 400V 33N | 400V 33N | --- | --- | --- | --- | --- | --- | 400V 33N | 400V 33N |
| 2508 | --- | --- | --- | 275V 100N | 275V 100N | 275V 100N | 275V 100N | 275V 100N | 275V 100N | 275V 100N | 275V 100N | 275V 100N | --- | --- | 275V 100N | 275V 100N | 275V 100N | 275V 100N | 275V 100N | 275V 100N |
| 2509 | --- | --- | --- | 250V 1N5 | 250V 1N5 | 250V 1N5 | 250V 1N5 | 250V 1N5 | 250V 1N5 | 250V 1N5 | 250V 1N5 | 250V 1N5 | 250V 1N5 | 250V 1N5 | 250V 1N5 | 250V 1N5 | 250V 1N5 | 250V 1N5 | 250V 1N5 | 250V 1N5 |
| 2528 | --- | --- | --- | 470N | 470N | 470N | 470N | 470N | 470N | 470N | 470N | 470N | 470N | 470N | 470N | 470N | 470N | 470N | 470N | 470N |
| 2542 | 250V 1N5 | 250V 1N5 | 250V 1N5 | 250V 1N | 250V 1N | 250V 1N | 250V 1N | 250V 1N | 250V 1N | 250V 1N | 250V 1N | 250V 1N | 250V 1N | 250V 1N | 250V 1N | 250V 1N | 250V 1N | 250V 1N | 250V 1N | 250V 1N |
| 2570 | --- | --- | --- | 250V 470P | 250V 470P | 250V 470P | 250V 470P | 250V 470P | 250V 470P | 250V 470P | 250V 470P | 250V 470P | 250V 470P | 250V 470P | 250V 470P | 250V 470P | 250V 470P | 250V 470P | 250V 470P | 250V 470P |
| 3505 | 1MA/423V | 1MA/423V | 1MA/423V | 1MA/612V | 1MA/612V | 1MA/612V | 1MA/612V | 1MA/612V | 1MA/612V | 1MA/612V | 1MA/612V | 1MA/612V | 1MA/612V | 1MA/612V | 1MA/612V | 1MA/612V | 1MA/612V | 1MA/612V | 1MA/612V | 1MA/612V |
| 3506 | --- | --- | --- | 3M3 | 3M3 | 3M3 | 3M3 | 3M3 | 3M3 | 3M3 | 3M3 | 3M3 | 3M3 | 3M3 | 3M3 | 3M3 | 3M3 | 3M3 | 3M3 | 3M3 |
| 3507 | --- | 144V 3R | 144V 3R | --- | --- | --- | --- | --- | --- | --- | --- | --- | --- | --- | --- | --- | --- | --- | --- | --- |
| 3508 | --- | --- | --- | --- | --- | --- | --- | --- | --- | --- | 470R | 470R | --- | --- | --- | --- | 470R | --- | 470R | 470R |
| 3514 | 100R | 100R | 100R | 47R | 47R | 47R | 47R | 47R | 47R | 47R | 47R | 47R | 47R | 47R | 47R | 47R | 47R | 47R | 47R | 47R |
| 3520 | 0R18 | 0R18 | 0R18 | 0R33 | 0R33 | 0R33 | 0R22 | 0R33 | 0R22 | 0R33 | 0R33 | 0R33 | 0R33 | 0R33 | 0R33 | 0R33 | 0R33 | 0R33 | 0R33 | 0R33 |
| 3527 | --- | --- | --- | 47K | 47K | 47K | 47K | 47K | 47K | 47K | 47K | 47K | 47K | 47K | 47K | 47K | 47K | 47K | 47K | 47K |
| 3528 | --- | --- | --- | 1M | 1M | 1M | 1M | 1M | 1M | 1M | 1M | 1M | 1M | 1M | 1M | 1M | 1M | 1M | 1M | 1M |
| 3529 | --- | --- | --- | 2M2 | 2M2 | 2M2 | 2M2 | 2M2 | 2M2 | 2M2 | 2M2 | 2M2 | 2M2 | 2M2 | 2M2 | 2M2 | 2M2 | 2M2 | 2M2 | 2M2 |
| 3523 | 145V 1R5 | --- | --- | 276V 4R5 | 276V 4R5 | 276V4R5 | 276V 4R5 | 276V 4R5 | 276V 4R5 | 276V 4R5 | 276V 4R5 | 276V 4R5 | 276V 4R5 | 276V 4R5 | 276V 4R5 | 276V 4R5 | 276V 4R5 | 276V 4R5 | 276V 4R5 | 276V 4R5 |
| 3565 | 15K | 15K | 15K | 18K | 18K | 18K | 18K | 18K | 18K | 15K | 15K | 15K | 15K | 15K | 15K | 15K | 15K | 15K | 15K | 15K |
| 3574 | 150K | 150K | 33K | 150K | 150K | 150K | 150K | 33K | 33K | 150K | 150K | 150K | 150K | 150K | 150K | 150K | 150K | 33K | 33K | 33K |
| 5500 | --- | --- | --- | 10MH 2A | 10MH 2A | 10MH 2A | 10MH 2A | 10MH 2A | 10MH 2A | 20MH 1A5 | 20MH 1A5 | 20MH 1A5 | --- | --- | 20MH 1A5 | 20MH 1A5 | 20MH 1A5 | 20MH 1A5 | 20MH 1A5 | 20MH 1A5 |
| 5502 | --- | --- | --- | --- | --- | --- | --- | --- | --- | --- | 65MH | 65MH | --- | --- | --- | --- | 65MH | --- | 65MH | 38MH |
| 5512 | SS40310-01 | SS40310-01 | SS40312-01 | SS42315-01 | SS42315-01 | SS42315-01 | SS49309-01 | SS42316-01 | SS49308-01 | SS42315-01 | SS42315-01 | SS42315-01 | SS42315-01 | SS42317-01 | SS42315-01 | SS42315-01 | SS42315-01 | SS42316-01 | SS42316-01 | SS42316-01 |
| 6500 | GBU4JL | GBU6JL | GBU6JL | GBU4JL | GBU4JL | GBU6JL | GBU6JL | GBU6JL | GBU6JL | GBU4JL | GBU4JL | BYV29X-500 | GBU4JL | GBU4JL | GBU4JL | GBU4JL | GBU4JL | GBU4JL | GBU4JL | GBU4JL |
| 6538 | --- | --- | --- | BAS316 | BAS316 | BAS316 | BAS316 | BAS316 | BAS316 | BAS316 | BAS316 | BAS316 | BAS316 | BAS316 | BAS316 | BAS316 | BAS316 | BAS316 | BAS316 | BAS316 |
| 6551 | STTH8L06D | BYV29X-500 | BYV29X-500 | STTH8L06D | STTH8L06D | STTH8L06D | STTH8L06D | STTH8L06D | BYV29X-500 | STTH8L06D | STTH8L06D | GBU4JL | STTH8L06D | STTH8L06D | STTH8L06D | STTH8L06D | STTH8L06D | STTH8L06D | STTH8L06D | BYV29X-500 |
| 6565 | UDZS9.1B | UDZS9.1B | UDZS9.1B | UDZS7.5B | UDZS7.5B | UDZS7.5B | UDZS7.5B | UDZS7.5B | UDZS7.5B | UDZS10B | UDZS10B | UDZS10B | UDZS10B | UDZS10B | UDZS10B | UDZS10B | UDZS10B | UDZS10B | UDZS10B | UDZS10B |
| 7512 | FQPF9N50 | FQPF9N50 | FQPF9N50 | FQPF7N80 | STP10NK8OZFP | STP10NK8OZFP | STP10NK8OZFP | STP10NK8OZFP | STP10NK8OZFP | FQPF7N80 | FQPF7N80 | FQPF7N80 | FQPF7N80 | FQPF7N80 | FQPF7N80 | FQPF7N80 | FQPF7N80 | FQPF7N80 | FQPF7N80 | FQPF7N80 |
| 7532 | --- | --- | --- | BC857B | BC857B | BC857B | BC857B | BC857B | BC857B | BC857B | BC857B | BC857B | BC857B | JMP | JMP | --- | --- | --- | --- | BC857B |
| 9502 | JMP | JMP | JMP | --- | --- | --- | --- | --- | --- | --- | --- | --- | JMP | JMP | --- | --- | --- | --- | --- | --- |
| 9504 | JMP | JMP | JMP | --- | --- | --- | --- | --- | --- | --- | --- | --- | JMP | JMP | --- | --- | --- | --- | --- | --- |
| 9506 | JMP | JMP | JMP | JMP | JMP | JMP | JMP | JMP | JMP | JMP | --- | --- | JMP | JMP | JMP | JMP | --- | JMP | --- | --- |

| AUDIO OUTPUT | 2X5W | 2X10W | 2X10+20W | 2X15W |
|---|---|---|---|---|
| 1543 | --- | --- | 2A 250V | 2A250V |
| 2562 | 25V 1000uF | 25V 2200uF | 25V 2200uF | 25V 2200uF |
| 2563 | 25V 1000uF | 25V 2200uF | 25V 2200uF | 25V 2200uF |
| 3571 | 220R | 220R | 220R | 680R |
| 3572 | 220R | 220R | 220R | 470R |
| 6562 | SB360 | SB360 | SB360 | SB380 |
| 6563 | SB360 | SB360 | SB360 | SB380 |
| 9514 | JMP | JMP | --- | --- |

| REGION | NAFTA | ROW |
|---|---|---|
| 1506 | --- | Main Switch |
| 9507 | JMP | --- |
| 9508 | JMP | --- |



E_14480_126.eps
100504

## Mono Carrier: Deflection

# A2 LINE & FRAME DEFLECTION

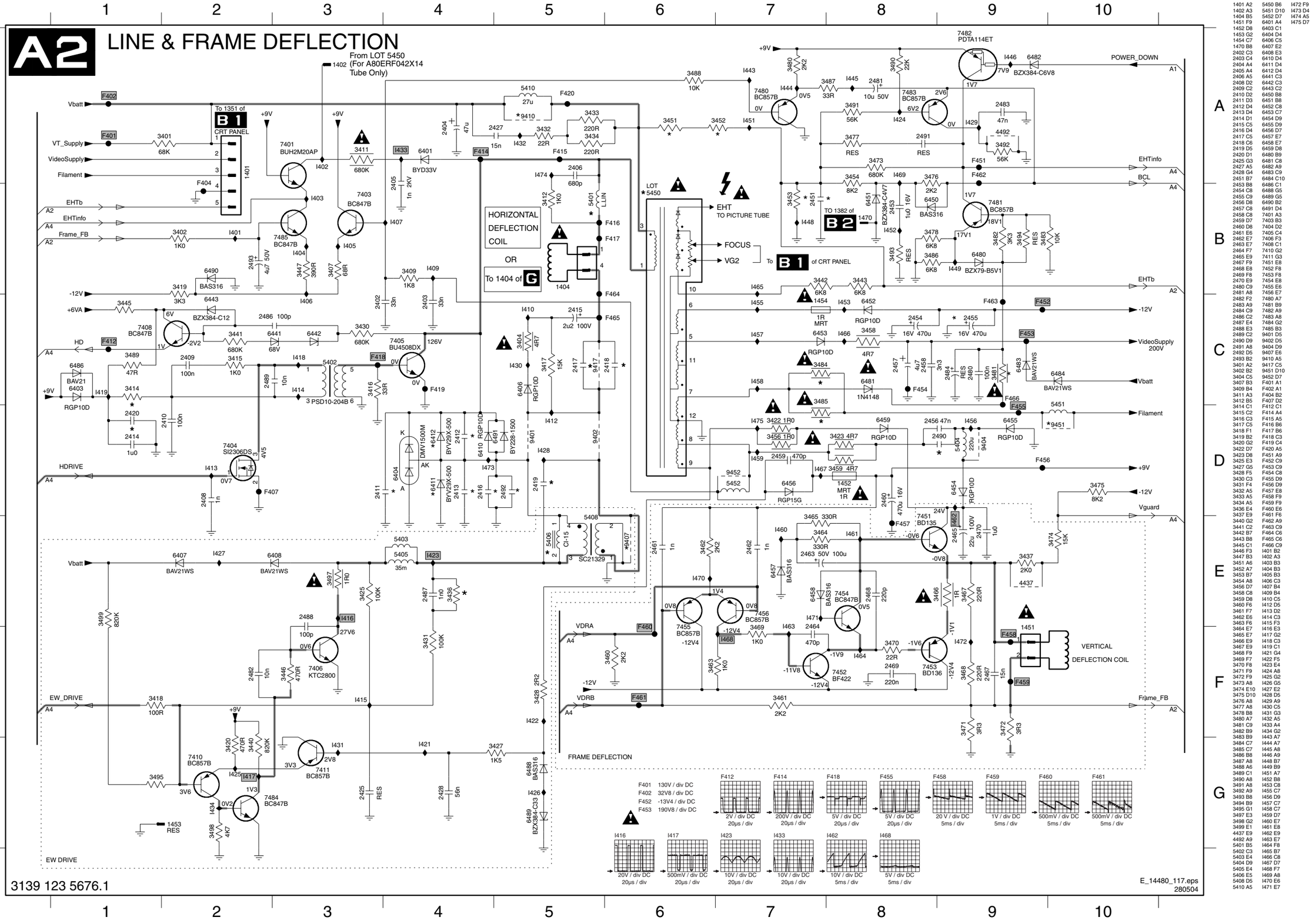



1401 A2 5450 B6 I472 F9
1402 A3 5451 D10 I473 D4
1404 B5 5452 D7 I474 A5
1451 F9 6401 A4 I475 D7
1452 D8 6403 C1
1453 G2 6404 D4
1454 C7 6406 C5
1470 B8 6407 E2
2402 C3 6408 E3
2403 C4 6410 D4
2404 A4 6411 D4
2405 A4 6412 D4
2406 A5 6441 C3
2408 D2 6442 C3
2409 C2 6443 C2
2410 D2 6450 B8
2411 D3 6451 B8
2412 D4 6452 C8
2413 D4 6453 C7
2414 D1 6454 D9
2415 C5 6455 D9
2416 D4 6456 D7
2417 C5 6457 E7
2418 C6 6458 E7
2419 D5 6459 D8
2420 D1 6480 B9
2425 G3 6481 C8
2427 A5 6482 A9
2428 G4 6483 C9
2451 B7 6484 C10
2453 B8 6486 C1
2462 C8 6488 G5
2455 C9 6489 G5
2456 D8 6490 B2
2457 C8 6491 D4
2458 C8 7401 A3
2459 D7 7403 B3
2460 D8 7404 D2
2461 E6 7405 C4
2462 E7 7406 F3
2463 E7 7408 C1
2464 F7 7410 G2
2465 E9 7411 G3
2467 F9 7451 E8
2468 E8 7452 F8
2469 F8 7453 F8
2470 E9 7454 E8
2480 C9 7455 E6
2481 A8 7456 E7
2482 F2 7480 A7
2483 A9 7481 B9
2484 C9 7482 A9
2486 C2 7483 A8
2487 E4 7484 G2
2488 E3 7485 B3
2489 C2 9401 D5
2490 D9 9402 D5
2491 A8 9404 D9
2492 D5 9407 E6
2493 B2 9410 A5
3401 A2 9417 C5
3402 B2 9451 D10
3404 C5 9452 D7
3407 B3 F401 A1
3409 B4 F402 A1
3411 A3 F404 B2
3412 B5 F407 D2
3414 C1 F412 C1
3415 C2 F414 A4
3416 C3 F415 A5
3417 C5 F416 B6
3418 F1 F417 B6
3419 B2 F418 C3
3420 G2 F419 C4
3422 D7 F420 A5
3423 D8 F451 A9
3425 E3 F452 C9
3427 G5 F453 C9
3428 F5 F454 C8
3430 C3 F455 D9
3431 F4 F456 D9
3432 A5 F457 E8
3433 A5 F458 F9
3434 A5 F459 F9
3436 E4 F460 E6
3437 E9 F461 F6
3440 G2 F462 A9
3441 C2 F463 C9
3442 B7 F464 C6
3443 B8 F465 C6
3445 C1 F466 C9
3446 F3 I401 B2
3447 B3 I402 A3
3451 A6 I403 B3
3452 A7 I404 B3
3453 B7 I405 B3
3454 A8 I406 C3
3456 D7 I407 B4
3458 C8 I409 B4
3459 D8 I410 C5
3460 F6 I412 D5
3461 F7 I413 D2
3462 E6 I414 C3
3463 F6 I415 F3
3464 E7 I416 E3
3465 E7 I417 G2
3466 E9 I418 C3
3467 E9 I419 C1
3468 F9 I421 G4
3469 F7 I422 F5
3470 F8 I423 E4
3471 F9 I424 A8
3472 F9 I425 G2
3473 A8 I426 G5
3474 E10 I427 E2
3475 D10 I428 D5
3476 A8 I429 A9
3477 A8 I430 C5
3478 B8 I431 G3
3480 A7 I432 A5
3481 C9 I433 A4
3482 B9 I434 G2
3483 B9 I443 A7
3484 C7 I444 A7
3485 C7 I445 A8
3486 B8 I446 A9
3487 A8 I448 B7
3488 A6 I449 B9
3489 C1 I451 A7
3490 A8 I452 B8
3491 A8 I453 C8
3493 B8 I454 C8
3494 B9 I455 C7
3495 G1 I456 D9
3497 E3 I457 C7
3498 G2 I458 C7
3499 E1 I459 D7
4437 E9 I460 E7
5401 B5 I461 E8
5402 C3 I462 E9
5403 E4 I463 E7
5404 D9 I464 F8
5405 E4 I465 B7
5406 E5 I466 C8
5408 D5 I467 D7
5410 A5 I468 F7
I469 A8
I470 E6
I471 E7

## Mono Carrier: Diversity Table for A2 (Deflection)

# DIVERSITY TABLE FOR A2 DEFLECTION

| Region | NAFTA | | | | | | | LATAM | | | | | | AP | | | | | CHINA | | | | INDIA | | |
|---|---|---|---|---|---|---|---|---|---|---|---|---|---|---|---|---|---|---|---|---|---|---|---|---|---|
| Tube | LPD | LPD | LPD | LPD | LPD | LPD | SMGK | LPD | LPD | LPD | LPD | LPD | SMGK | CPT | LPD | LPD | LPD | LPD | LPD | LPD | LPD | LPD | CPD | LPD | SMGK |
| Size | 27 V | 28 WR | 29 RF | 32 V | 32 V RF | 32 WR | 25 RF | 25 RF | 27V | 28WS | 28WR | 32WR | 29RF | 21RF | 25RF | 29RF | 32WR | 34RF | 25RF | 21RF | 29RF | 34RF | 21RF | 29RF | 29FSQ |
| 2411 | 470pF | 1.2nF | 1.5nF | 2.2nF | 680pF | 330pF | 1.2nF | 680nF | 470pF | 1.2nF | 1.2nF | 330pF | 1.5nF | 220pF | 680nF | 1.2nF | 330pF | 1nF | 680nF | 220pF | 1.2nF | 1nF | 220pF | 1.2nF | 680pF |
| 2412 | 12nF | 13nF | 15nF | 15nF | 12nF | 13nF | 15nF | 15nF | 12nF | 15nF | 13nF | 13nF | 15nF | 8n2 | 15nF | 15nF | 13nF | 12nF | 15nF | 8n2 | 15nF | 12nF | 8n2 | 15nF | 13nF |
| 2413 | 120nF | 15nF | 39nF | 33nF | 33nF | 18nF | 33nF | 33nF | 120nF | 18nF | 15nF | 18nF | 39nF | 68nF | 33nF | 33nF | 18nF | 33nF | 33nF | 68nF | 33nF | 33nF | 68nF | 33nF | 39nF |
| 2416 | - | 3n3 | - | - | 4n7 | - | - | - | - | 2n2 | 3n3 | - | - | - | - | 3n3 | - | - | - | - | 3n3 | - | - | 3n3 | - |
| 2418 | 390nF | - | 330nF | 470nF | 270nF | - | 390nF | 360nF | 390nF | - | - | - | 330nF | 220nF | 360nF | 330nF | - | 300nF | 360nF | 270nF | 330nF | 300nF | 220nF | 330nF | 390nF |
| 2419 | - | 390nF | 2u2 | 2u2 | 2u2 | 430nF | 2u2 | 2u2 | - | 470nF | 390nF | 430nF | 2u2 | - | 2u2 | 2u2 | 430nF | 2u2 | 2u2 | - | 2u2 | 2u2 | - | 2u2 | 2u2 |
| 2425 | - | 33nF | 33nF | 33nF | 10nF | 33nF | 33nF | 33nF | - | 33nF | 33nF | 33nF | 33nF | - | 33nF | 33nF | 33nF | 10nF | 33nF | - | 33nF | 10nF | - | 33nF | 33nF |
| 2451 | 150nF | 150nF | 180nF | 180nF | 150nF | 180nF | 100nF | 100nF | 150nF | 120nF | 150nF | 180nF | 100nF | 120nF | 120nF | 220nF | 180nF | 270nF | 120nF | 220nF | 220nF | 270nF | 120nF | 220nF | 220nF |
| 2457 | 4u7 | 4u7 | 4u7 | 4u7 | 4u7 | 4u7 | 4u7 | 4u7 | 4u7 | 4u7 | 4u7 | 4u7 | 4u7 | 4u7 | 4u7 | 4u7 | 4u7 | 4u7 | 4u7 | 4u7 | 4u7 | 4u7 | 4u7 | 4u7 | 4u7 |
| 2487 | - | 1n5 | 1n5 | 1n5 | 2n2 | 1n5 | 1n5 | 1n5 | - | 1n5 | 1n5 | 1n5 | 3n3 | 1nF | 1n5 | 1nF | 1n5 | 3n3 | 1n5 | 1nF | 1nF | 3n3 | 1nF | 1nF | 1nF |
| 2490 | 47n | - | - | - | - | - | 47n | - | 47n | - | - | - | - | - | - | - | - | - | - | - | - | - | - | - | - |
| 3224 | 680K 5% | 680K 5% | 680K 5% | 680K 5% | 560K 5% | 680K 5% | 680K 5% | 680K 5% | 680K 5% | 680K 5% | 560K 5% | 680K 5% | 680K 5% | 1M 5% | 680K 5% | 680K 5% | 680K 5% | 1M 5% | 680K 5% | 1M 5% | 680K 5% | 1M 5% | 1M 5% | 680K 5% | 1M 5% |
| 3295 | 8K2 5% | 10K 5% | 8K2 5% | 8K2 5% | 8K2 5% | 8K2 5% | 8K2 5% | 8K2 5% | 8K2 5% | 8K2 5% | 10K 5% | 8K2 5% | 8K2 5% | 2K7 5% | 8K2 5% | 10K 5% | 8K2 5% | 7K5 1% | 8K2 5% | 8K2 5% | 10K 5% | 7K5 1% | 2K7 5% | 10K 5% | 8K2 5% |
| 3414 | 1R 1W 5% | 2R2 1W 5% | 1R 1W 5% | 0R33 1W 5% | 1R 1W 5% | 6R8 1W 5% | 3R3 1W 5% | 1R 1W 5% | 1R 1W 5% | 4R7 1W 5% | 2R2 1W 5% | 6R8 1W 5% | 0R33 1W 5% | 10R 1W 5% | 1R 1W 5% | 1R 1W 5% | 6R8 1W 5% | 6R8 1W 5% | 1R 1W 5% | 4R7 1W 5% | 1R 1W 5% | 6R8 1W 5% | 10R 1W 5% | 1R 1W 5% | 4R7 1W 5% |
| 3431 | 82K 1% | 82K 1% | 82K 1% | 82K 1% | 10K 1% | 82K 1% | 82K 1% | 82K 1% | 82K 1% | 82K 1% | 82K 1% | 82K 1% | 82K 1% | 82K 1% | 82K 1% | 82K 1% | 82K 1% | 10K 1% | 82K 1% | 82K 1% | 82K 1% | 10K 1% | 82K 1% | 82K 1% | 82K 1% |
| 3451 | 68K 1% | 82K 1% | 68K 1% | 75K 1% | 68K 1% | 82K 1% | 68K 1% | 68K 1% | 68K 1% | 120K 1% | 82K 1% | 82K 1% | 68K 1% | 82K 1% | 68K 1% | 68K 1% | 82K 1% | 68K 1% | 68K 1% | 68K 1% | 68K 1% | 68K 1% | 82K 1% | 68K 1% | 56K 1% |
| 3452 | 18K 5% | 15K 5% | 15K 5% | 15K 5% | 6K8 5% | 6K8 5% | 18K 5% | 18K 5% | 18K 5% | 27K 5% | 15K 5% | 6K8 5% | 15K 5% | 18K 5% | 18K 5% | 15K 5% | 6K8 5% | 18K 5% | 18K 5% | 18K 5% | 15K 5% | 18K 5% | 18K 5% | 15K 5% | 18K 5% |
| 3453 | 33K 5% | 22K 5% | 33K 5% | 22K 5% | 33K 5% | 22K 5% | 33K 5% | 33K 5% | 33K 5% | 33K 5% | 22K 5% | 22K 5% | 33K 5% | 33K 5% | 33K 5% | 33K 5% | 22K 5% | 33K 5% | 33K 5% | 33K 5% | 33K 5% | 33K 5% | 33K 5% | 33K 5% | 33K 5% |
| 3467 | 120R 5% | 120R 5% | 120R 5% | 220R 5% | 150R 5% | 220R 5% | 120R 5% | 120R 5% | 120R 5% | 220R 5% | 120R 5% | 220R 5% | 120R 5% | 220R 5% | 120R 5% | 120R 5% | 220R 5% | 150R 5% | 120R 5% | 220R 5% | 120R 5% | 150R 5% | 220R 5% | 120R 5% | 220R 5% |
| 3468 | 220R 5% | 150R 5% | 150R 5% | 150R 5% | 150R 5% | 220R 5% | 150R 5% | 150R 5% | 220R 5% | 220R 5% | 150R 5% | 220R 5% | 150R 5% | 220R 5% | 150R 5% | 150R 5% | 220R 5% | 150R 5% | 150R 5% | 220R 5% | 150R 5% | 150R 5% | 220R 5% | 150R 5% | 220R 5% |
| 3471 | - | 2R7 1% | 2R4 1% | 2R4 1% | 2R2 1% | 1R8 1% | 2R2 1% | 2R4 1% | - | 2R2 1% | 2R7 1% | 1R8 1% | 1R8 1% | 2R2 1% | 2R4 1% | 2R4 1% | 1R8 1% | 2R2 1% | 2R4 1% | 3R9 1% | 2R4 1% | 2R2 1% | 2R2 1% | 2R4 1% | 2R2 1% |
| 3472 | 3R3 1% | 2R4 1% | 2R4 1% | 2R7 1% | 2R2 1% | 3R3 1% | 2R 1% | 2R4 1% | 3R3 1% | 3R3 1% | 2R4 1% | 3R3 1% | 2R2 1% | 3R9 1% | 2R4 1% | 2R4 1% | 3R3 1% | 2R2 1% | 2R4 1% | 4R7 1% | 2R4 1% | 2R2 1% | 3R9 1% | 2R4 1% | 2R2 1% |
| 3473 | 390K 5% | 680K 5% | 820K 5% | 820K 5% | 820K 5% | 820K 5% | 680K 5% | 820K 5% | 390K 5% | 1M 5% | 680K 5% | 820K 5% | 1M 5% | 390K 5% | 820K 5% | 680K 5% | 820K 5% | 430K 5% | 820K 5% | 680K 5% | 680K 5% | 430K 5% | 390K 5% | 680K 5% | 680K 5% |
| 3474 | 15K 5% | 12K 5% | 15K 5% | 15K 5% | 15K 5% | 15K 5% | 15K 5% | 15K 5% | 15K 5% | 12K 5% | 15K 5% | 15K 5% | 15K 5% | 15K 5% | 15K 5% | 15K 5% | 15K 5% | 15K 5% | 15K 5% | 15K 5% | 15K 5% | 15K 5% | 15K 5% | 15K 5% | 15K 5% |
| 3481 | 5R6 5% | 5R6 5% | 10R 5% | 2R7 5% | 5R6 5% | 4R7 5% | - | - | 5R6 5% | - | 5R6 5% | 4R7 5% | | - | - | - | 4R7 5% | - | - | - | - | - | - | - | - |
| 3482 | 22K 1% | 22K 1% | 2K4 1% | 22K 1% | 22K 1% | 22K 1% | - | - | 22K 1% | - | 22K 1% | 22K 1% | | - | - | - | 22K 1% | - | - | - | - | - | - | - | - |
| 3483 | 56K 1% | 56K 1% | 5K6 1% | 56K 1% | 56K 1% | 56K 1% | - | - | 56K 1% | - | 56K 1% | 56K 1% | - | - | - | - | 56K 1% | - | - | - | - | - | - | - | - |
| 3491 | 100K 5% | 100K 5% | 100K 5% | 82K 5% | 68K 5% | 82K 5% | 100K 5% | 100K 5% | 100K 5% | 82K 5% | 100K 5% | 82K 5% | 82K 5% | 82K 5% | 100K 5% | 82K 5% | 82K 5% | 82K 5% | 100K 5% | 56K 5% | 82K 5% | 82K 5% | 82K 5% | 82K 5% | 56K 5% |
| 3494 | 180K 5% | - | 100K 5% | 150K 5% | 680K 5% | 680K 5% | - | - | 180K 5% | - | - | 680K 5% | | - | - | - | 680K 1% | - | - | - | - | - | - | - | - |
| 3499 | 680K 5% | 680K 5% | 680K 5% | 330K 5% | 680K 5% | 680K 5% | 680K 5% | 680K 5% | 680K 5% | 680K 5% | 680K 5% | 680K 5% | 680K 5% | 680K 5% | 680K 5% | 680K 5% | 680K 5% | 680K 5% | 680K 5% | 680K 5% | 56K 5% | 56K 5% | 56K 5% | 56K 5% | 56K 5% |
| 5401 | 50uH | 42uH | 33uH | 33uH | 25uH | 42uH | 33uH | 37uH | 50uH | 16uH | 42uH | 42uH | 25uH | 82uH | 37uH | 33uH | 42uH | 42uH | - | - | - | - | 82uH | 33uH | 33uH |
| 5408 | - | SC2132 9-00B | CU15 | CU15 | CU15 | SC2132 9-00B | CU15 | CU15 | - | SC2132 9-00B | SC2132 9-00B | SC2132 9-00B | CU15 | - | CU15 | CU15 | SC2132 9-00B | CU15 | CU15 | - | CU15 | CU15 | - | CU15 | CU15 |
| 5450 | JF0501-21835B | JF0501-85021B | JMP | JF0501-21836B | JF0501-21140B | JF0101-85020B | JMP | JF0501-2153B | JF0501-21835B | JF0501-21133B | JF0501-85021B | JF0101-85021B | JF0501-21836B | JF0501-2135B | JF0501-2135B | JF0501-2136B | JF0101-85021B | JF0501-2601B | JF0501-2135B | 27uH 10% | JF0501-2135B | JF0501-2601B | JF0501-2135B | JF0501-2136B | JF0501-2133B |
| 5451 | 27uH 10% | JMP | 33uH 10% | 27uH 10% | JMP | JMP | 33uH 10% | 27uH 10% | 27uH 10% | 39uH 10% | JMP | JMP | 27uH 10% | 68uH 5% | 27uH 10% | 27uH 10% | 0.58mm COL | 22uH | DVM1500M | 68uH 5% | DVM1500M | 22uH | 68uH 5% | 27uH 10% | 22uH 10% |
| 6404 | DVM1500M | - | DVM1500M | DVM1500M | DVM1500M | - | DVM1500M | DVM1500M | DVM1500M | - | - | - | DMV1500M | DVM1500M | DVM1500M | DVM1500M | - | DVM1500M | - | - | - | - | DVM1500M | DVM1500M | DVM1500M |
| 6411 | - | BY229X-800 | - | - | - | BY229X-800 | - | - | - | BY229X-80 | BY229X-80 | BY229X-800 | - | - | - | - | BY229X-800 | - | - | - | - | - | - | - | - |
| 6412 | - | BY359X-1500 | - | - | - | BY359X-1500 | - | - | - | BY359X-1500 | BY359X-1500 | BY359X-1500 | - | - | - | - | BY359X-1500 | - | - | - | - | - | - | - | - |
| 7405 | BU4508DX | BU2725DX | BU4508DX | BU2725DX | BU4508DX | BU2725DX | BU4508DX | BU4508DX | BU4508DX | BU4508DX | BU2725DX | BU2725DX | BU4508DX | BU4508DX | BU4508DX | BU4508DX | BU2725DX | BU4508DX | BU4508DX | BU4508DX | BU4508DX | BU4508DX | BU4508DX | BU4508DX | BU4508DX |
| 9407 | - | - | JMP | JMP | JMP | - | JMP | JMP | - | - | - | - | JMP | - | JMP | JMP | - | JMP | JMP | - | JMP | JMP | - | JMP | JMP |
| 9417 | - | JMP | - | - | - | - | - | - | - | JMP | - | - | - | - | - | - | JMP | - | - | - | - | - | - | - | - |

| Region | EUROPE | | | | | | | |
|---|---|---|---|---|---|---|---|---|
| Tube | LPD | LPD | LPD | LPD | LPD | LPD | LPD | LPD |
| Size | 21RF | 24 WR | 25 I | 28 I | 29 RF | 28 WR | 28 WS | 32 WR |
| 2411 | 470pF | 1n2 | 470pF | 470pF | 1nF | 680pF | 680pF | 680pF |
| 2412 | 8n2 | 13nF | 9n1 | 9n1 | 13nF | 11nF | 11nF | 11nF |
| 2413 | 33nF | 15nF | 18nF | 18nF | 33nF | 15nF | 15nF | 15nF |
| 2416 | - | 2n2 | - | - | - | 4n7 | 2n2 | 4n7 |
| 2418 | 470nF | - | 390nF | 390nF | 360nF | - | - | - |
| 2419 | 2u2 | 470nF | 470nF | 470nF | 2u2 | 430nF | 470nF | 430nF |
| 2425 | 33nF | 33nF | 33nF | 33nF | 33nF | 33nF | 33nF | 33nF |
| 2451 | 220nF | 220nF | 220nF | 220nF | 220nF | 220nF | 220nF | 220nF |
| 2457 | 4u7 | 4u7 | 4u7 | 4u7 | 4u7 | 4u7 | 4u7 | 4u7 |
| 2487 | 1nF | 1nF | 1nF | 1nF | 1nF | 1nF | 1nF | 1nF |
| 2490 | 47n | - | - | - | - | - | - | - |
| 3224 | 1M 5% | 1M 5% | 1M 5% | 1M 5% | 1M 5% | 1M 5% | 1M 5% | 1M 5% |
| 3295 | 8K2 5% | 8K2 5% | 8K2 5% | 8K2 5% | 8K2 5% | 8K2 5% | 8K2 5% | 8K2 5% |
| 3414 | 4R7 1W | 4R7 1W | 10R 1W 5% | 10R 1W 5% | 2R2 1W | 3R3 1W | 4R7 1W | 3R3 1W |
| 3431 | 82K 1% | 82K 1% | 82K 1% | 82K 1% | 82K 1% | 82K 1% | 82K 1% | 68K 1% |
| 3451 | 68K 1% | 56K 1% | 120K 5% | 120K 5% | 68K 1% | 68K 1% | 68K 1% | 18K 5% |
| 3452 | 18K 5% | 18K 5% | 18K 5% | 18K 5% | 18K 5% | 18K 5% | 18K 5% | 220R 5% |
| 3453 | 22K 5% | 22K 5% | 33K 5% | 33K 5% | 33K 5% | 22K 5% | 22K 5% | 220R 5% |
| 3467 | 220R 5% | 220R 5% | 220R 5% | 220R 5% | 220R 5% | 220R 5% | 220R 5% | 1R5 1% |
| 3468 | 220R 5% | 220R 5% | 220R 5% | 220R 5% | 220R 5% | 220R 5% | 220R 5% | 6R8 1% |
| 3471 | 3R3 1% | 3R3 5% | 1R5 1% | 1R5 1% | 2R2 1% | 1R5 1% | 3R3 1% | 470K 5% |
| 3472 | 3R3 1% | 3R3 1% | 2R2 1% | 2R2 1% | 2R2 1% | 6R8 1% | 3R3 1% | 15K 5% |
| 3473 | 470K 5% | 470K 5% | 680K 5% | 680K 5% | 680K 5% | 470K 5% | 470K 5% | - |
| 3474 | 15K 5% | 15K 5% | 15K 5% | 15K 5% | 15K 5% | 15K 5% | 15K 5% | - |
| 3481 | - | - | - | - | - | - | - | - |
| 3482 | - | - | - | - | - | - | - | 56K 5% |
| 3483 | - | - | - | - | - | - | - | 56K 5% |
| 3491 | 56K 5% | 56K 5% | 56K 5% | 56K 5% | 56K 5% | 56K 5% | 56K 5% | - |
| 3494 | 56K 5% | 56K 5% | 56K 5% | 56K 5% | 56K 5% | 56K 5% | 56K 5% | 680K 5% |
| 3499 | 680K 5% | 680K 5% | 680K 5% | 680K 5% | 680K 5% | 680K 5% | 680K 5% | 680K 5% |
| 5401 | 82uH | 37uH | 50uH | 50uH | 25uH | 50uH | 25uH | 25uH |
| 5408 | CU15 | SC21329-00B | SC21329-00B | SC21329-00B | CU15 | SC21329-00B | SC21329-00B | SC21329-00B |
| 5450 | 1342.0033CY | 1342.0048B | 1342.0048B | 1342.0048B | 1362.0016AB | 1362-0015AB | 1342.0042CY | 1362-0015AB |
| 5451 | 22uH 10% | 22uH 10% | 27uH 10% | 27uH 10% | 39uH 10% | 0.588 COL | 22uH 10% | 33uH 10% |
| 6404 | DVM1500M | - | - | - | DVM1500M | - | - | - |
| 6411 | - | BY229X-800 | BY229X-800 | BY229X-800 | - | BY229X-800 | BY229X-800 | BY229X-800 |
| 6412 | - | BY359X-1500 | BY359X-1500 | BY359X-1500 | - | BY359X-1500 | BY359X-1500 | BY359X-1500 |
| 7405 | BU4508DX | BU2725DX | BU2725DX | BU2725DX | BU4508DX | BU2725DX | BU4508DX | BU2725DX |
| 9407 | JMP | - | - | - | JMP | - | - | - |
| 9417 | - | JMP | - | - | - | JMP | JMP | JMP |

3139 123 5676.1

E_14480_127.eps
100504

## Mono Carrier: Tuner IF

# A3 TUNER IF

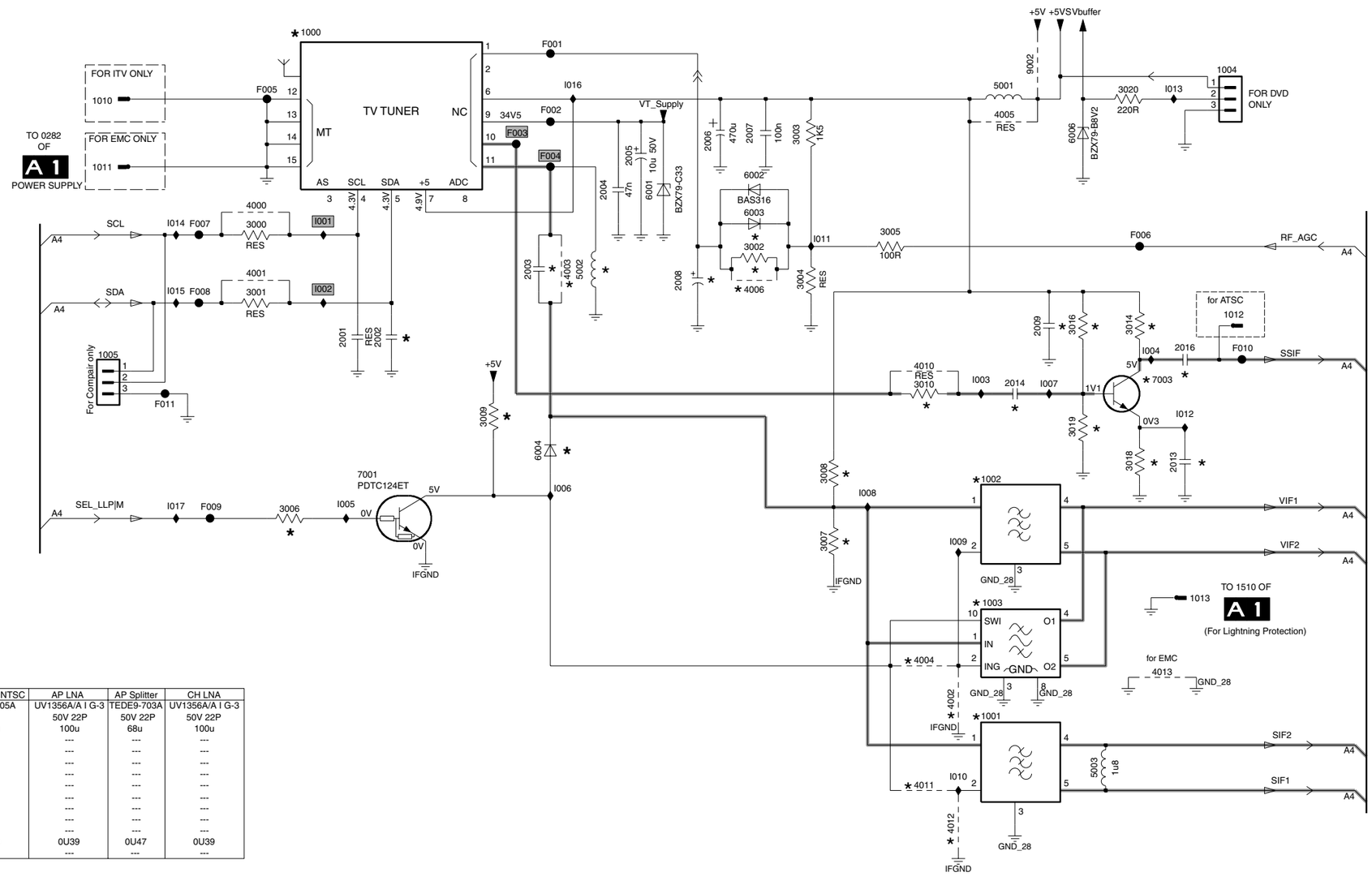


| ITEM | EU Normal | EU FM Radio | EU Splitter | NA/LA/AP NTSC | AP LNA | AP Splitter | CH LNA |
|---|---|---|---|---|---|---|---|
| 1000 | UV1316E/A I-4 | UR1316/A I-3 | TEDE9-703A | TEDH9-305A | UV1356A/A I G-3 | TEDE9-703A | UV1356A/A I G-3 |
| 2002 | 50V 22P | 50V 22P | 50V 22P | --- | 50V 22P | 50V 22P | 50V 22P |
| 2008 | 68u | 68u | 68u | 100u | 100u | 68u | 100u |
| 2009 | --- | 16V 100N | --- | --- | --- | --- | --- |
| 2013 | --- | 25V 1N | --- | --- | --- | --- | --- |
| 2014 | --- | 25V 1N | --- | --- | --- | --- | --- |
| 2016 | --- | 25V 1N | --- | --- | --- | --- | --- |
| 3010 | --- | 330R | --- | --- | --- | --- | --- |
| 3014 | --- | 820R | --- | --- | --- | --- | --- |
| 3016 | --- | 100K | --- | --- | --- | --- | --- |
| 3018 | --- | 560R | --- | --- | --- | --- | --- |
| 3019 | --- | 150K | --- | --- | --- | --- | --- |
| 5002 | 0U47 | 0U47 | 0U47 | 0U39 | 0U39 | 0U47 | 0U39 |
| 7003 | --- | BFS20 | --- | --- | --- | --- | --- |

| ITEM | EU-QSS | NA/LA/AP INT | AP QSS | CH QSS |
|---|---|---|---|---|
| 1001 | K9656M | --- | K9362M | K9352M |
| 1002 | K3953M | M1971M | K7257M | --- |
| 1003 | --- | --- | --- | K6274M |
| 2003 | 50V 10N | --- | 50V 10N | 50V 10N |
| 3002 | 10K | --- | --- | --- |
| 3006 | 10K | --- | 10K | 10K |
| 3007 | 2K2 | --- | 2K2 | 2K2 |
| 3008 | 6K8 | --- | 6K8 | 6K8 |
| 3009 | 2K2 | --- | 2K2 | 2K2 |
| 4002 | JMP | JMP | --- | JMP |
| 4003 | --- | JMP | --- | --- |
| 4004 | --- | --- | JMP | --- |
| 4006 | --- | JMP | JMP | JMP |
| 4011 | JMP | --- | --- | --- |
| 4012 | --- | --- | JMP | JMP |
| 6002 | BAS316 | --- | --- | --- |
| 6004 | 1SS356 | --- | 1SS356 | 1SS356 |
| 7001 | PDTC124ET | --- | PDTC124ET | PDTC124ET |

F003 0V (N.A.)

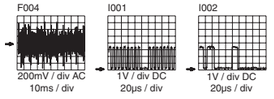


E_14480_118.eps
280504

3139 123 5676.1

1000 A4
1001 E8
1002 D8
1003 D8
1004 A10
1005 C3
1010 A3
1011 B3
1012 C10
1013 D10
2001 C4
2002 C4
2003 B5
2004 B6
2005 A6
2006 A6
2007 A7
2008 B6
2009 C9
2013 C9
2014 C8
2016 C9
3000 B4
3001 B4
3002 B7
3003 A7
3004 B7
3005 B8
3006 D4
3007 D7
3008 C7
3009 C5
3010 C8
3014 C9
3016 C9
3018 C9
3019 C9
3020 A9
4000 B4
4001 B4
4002 E8
4003 B6
4004 E8
4005 A8
4006 B7
4010 C8
4011 E8
4012 F8
4013 E9
5001 A8
5002 B6
5003 E9
6001 B6
6002 B7
6003 B7
6004 C5
6006 A9
7001 D4
7003 C9
9002 A9
F001 A5
F002 A5
F003 A5
F004 B5
F005 A4
F006 B9
F007 B3
F008 B3
F009 D3
F010 C10
F011 C3
I001 B4
I002 B4
I003 C8
I004 C9
I005 D4
I006 D6
I007 C9
I008 D7
I009 D8
I010 E8
I011 B7
I012 C9
I013 A9
I014 B3
I015 B3
I016 A6
I017 D3

## Mono Carrier: Hercules

# A4 HERCULES

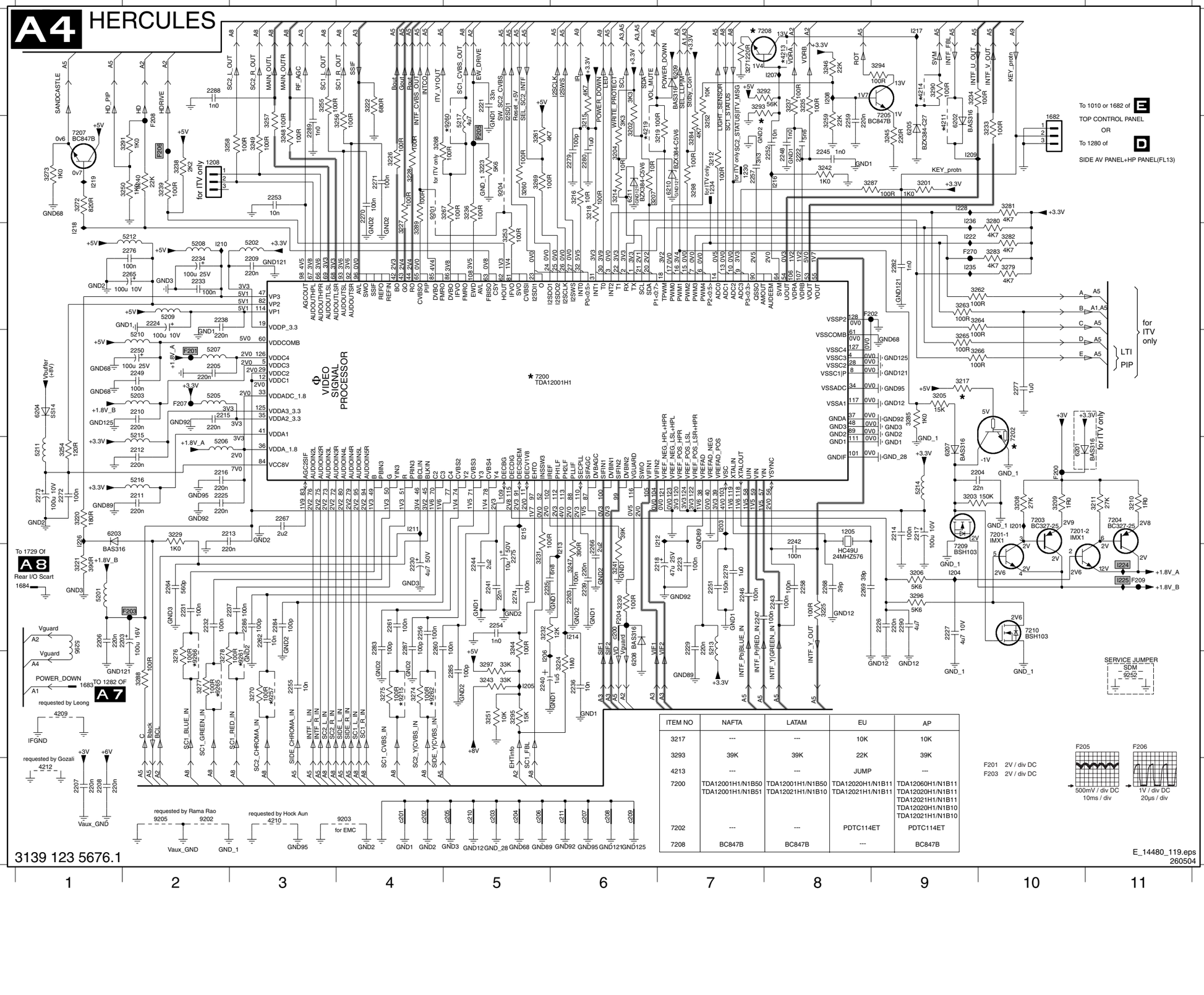


| ITEM NO | NAFTA | LATAM | EU | AP |
|---|---|---|---|---|
| 3217 | --- | --- | 10K | 10K |
| 3293 | 39K | 39K | 22K | 39K |
| 4213 | --- | --- | JUMP | --- |
| 7200 | TDA12001H1/N1B50<br>TDA12001H1/N1B51 | TDA12001H1/N1B50<br>TDA12021H1/N1B10 | TDA12020H1/N1B11<br>TDA12021H1/N1B11 | TDA12060H1/N1B11<br>TDA12020H1/N1B11<br>TDA12021H1/N1B11<br>TDA12020H1/N1B10<br>TDA12021H1/N1B10 |
| 7202 | --- | --- | PDTC114ET | PDTC114ET |
| 7208 | BC847B | BC847B | --- | BC847B |



E_14480_119.eps 260504


1205 E8 3206 F9 4214 A9 c208 H6
1208 B2 3207 B6 4219 B6 c209 H6
1230 B7 3208 E10 5201 F1 c210 H5
1234 B7 3209 E10 5202 C3 c211 H6
1682 B10 3210 E11 5203 D2
1683 G1 3211 E11 5205 D2
1684 F1 3212 B7 5206 E2
2203 F2 3214 B6 5207 D2
2204 E9 3215 B6 5208 C2
2205 D2 3216 B6 5209 C2
2206 F1 3217 D9 5210 D2
2207 H1 3218 B6 5211 E1
2208 H1 3219 B7 5212 C2
2209 C3 3220 E1 5213 F7
2210 D2 3221 F1 5214 E9
2211 E2 3222 A4 5215 E2
2212 E2 3223 B5 5216 E2
2213 E2 3224 G6 5217 B5
2214 E9 3225 F8 5295 F1
2215 D2 3226 B4 6201 E10
2216 E2 3227 C4 6202 B9
2217 E9 3228 B4 6203 E1
2218 F7 3229 E2 6204 D1
2221 A5 3230 F6 6205 B9
2222 B8 3231 F5 6207 E9
2223 F7 3232 F5 6208 G6
2224 C2 3233 B10 6209 A7
2225 E2 3234 A9 6210 B7
2226 F9 3235 A8 6211 B6
2227 F9 3236 B5 7200 D5
2229 F7 3237 A8 7201-1 E10
2230 F4 3238 B2 7201-2 E10
2231 F2 3239 B2 7202 D10
2232 F2 3240 B2 7203 E10
2233 C2 3241 F6 7204 E11
2234 C2 3242 B8 7205 B9
2235 F5 3243 G5 7207 B1
2236 G6 3244 F5 7208 A8
2237 F3 3245 B9 7209 F9
2238 C2 3246 A8 7210 F10
2239 F6 3247 F6 9201 B4
2240 G5 3248 B3 9202 H2
2241 F5 3249 B3 9203 H4
2242 E8 3250 B2 9204 B5
2243 F8 3251 G5 9205 H2
2244 F5 3252 B7 9215 G4
2245 B8 3253 C5 9257 G3
2246 F7 3254 E1 9260 B5
2247 F7 3255 A3 9261 G3
2248 B8 3256 B4 9262 G4
2249 D2 3257 B3 9265 G2
2250 D2 3258 B2 9266 G2
2251 F7 3259 B8 F200 E10
2252 B8 3260 B5 F201 D2
2253 B3 3261 B5 F202 C8
2254 F5 3262 C9 F203 F2
2255 G3 3263 C9 F204 F6
2256 F4 3264 C9 F205 B5
2257 B7 3265 D9 F206 B2
2258 F8 3266 D9 F207 D2
2259 B8 3267 B5 F208 B2
2260 F4 3268 B4 F209 F11
2261 F4 3269 B5 F270 C9
2262 F3 3270 G3 I201 E10
2263 F6 3271 A7 I203 E7
2264 F2 3272 B1 I204 F9
2265 C2 3273 B1 I205 G5
2266 F6 3274 G4 I206 G5
2267 E3 3275 G4 I207 A8
2268 F8 3276 G2 I208 A8
2269 F8 3277 G2 I209 B9
2270 B4 3278 G2 I210 C2
2271 B4 3279 C10 I211 E4
2272 E1 3280 C10 I212 E7
2273 E1 3281 B10 I213 F6
2274 F5 3282 C10 I214 F6
2275 F5 3283 C10 I215 E5
2276 C2 3284 B7 I216 B8
2277 D10 3285 D9 I217 A9
2278 F7 3287 B8 I218 C1
2279 B6 3288 G2 I219 B1
2280 B6 3289 C4 I222 C9
2282 C9 3290 A9 I224 F11
2283 F4 3291 B2 I225 F11
2284 F3 3292 A7 I226 E1
2285 G5 3293 A7 I228 B9
2286 F3 3294 A9 I235 C9
2287 F4 3295 G5 I236 B9
2288 A2 3296 F9 c200 F6
2289 B3 3297 G5 c201 H4
2290 F9 3298 B7 c202 H4
3201 B9 4209 G1 c203 H5
3202 B6 4210 H3 c204 H5
3203 E9 4211 B9 c205 H5
3204 B6 4212 H1 c206 H5
3205 D9 4213 A8 c207 H6

## Mono Carrier: Features & Connectivities

# A5 FEATURES & CONNECTIVITIES

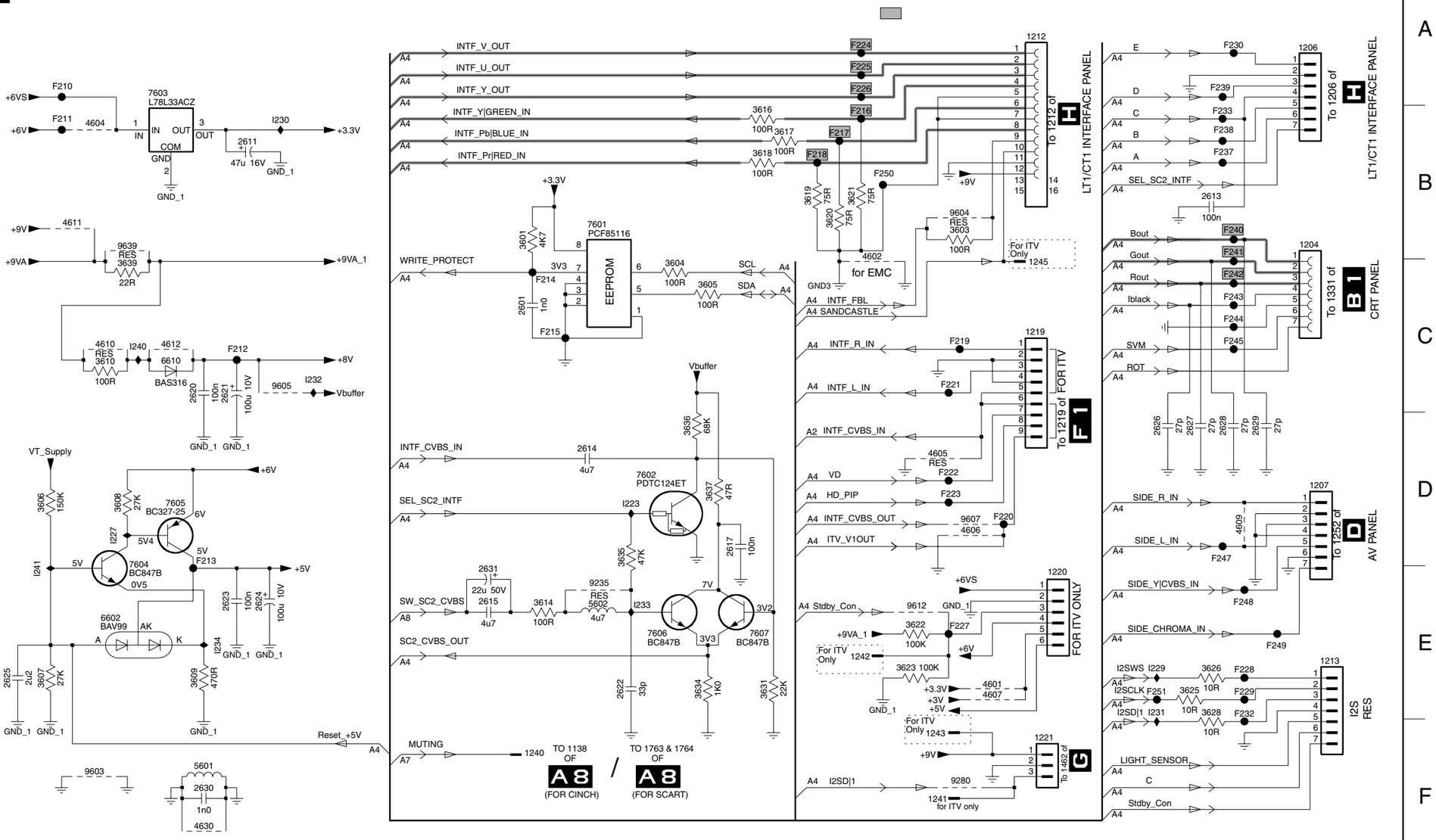


| 1213 | MTV | ITV |
|---|---|---|
| 1 | I2SWS | ITV DATA OUT/SDA |
| 2 | I2SCLK | ITV DATAIN |
| 3 | I2SDI1 | ITV CLOCK |
| 4 | GND | GND |
| 5 | Light sensor | ITV SCL |
| 6 | C | ITV POR 1 |
| 7 | Stdby-con | Stdby-con |

| 1206 | DVD | iDTV | USB | PCMCIA |
|---|---|---|---|---|
| A | - | - | - | - |
| B | Power On | Power On | Power On | Power On |
| C | Bus Request | Bus Request | Bus Request | Bus Request |
| D | Rx | - | Rx | Rx |
| E | Tx | - | Tx | Tx |

1204 B9 9639 B2
1206 A9 F210 A1
1207 D9 F211 B1
1212 A7 F212 C2
1213 E9 F213 D2
1219 C8 F214 C4
1220 E8 F215 C4
1221 F8 F216 B6
1240 F4 F217 B6
1241 F7 F218 B6
1242 E6 F219 C7
1243 F7 F220 D7
1245 C8 F221 C7
2601 C4 F222 D7
2611 B2 F223 D7
2613 B9 F224 A6
2614 D5 F225 A6
2615 E4 F226 A6
2617 D6 F227 E7
2620 C2 F228 E9
2621 C2 F229 E9
2622 E5 F230 A9
2623 E2 F232 E9
2624 E3 F233 B9
2625 E1 F237 B9
2626 D8 F238 B9
2627 D9 F239 A9
2628 D9 F240 B9
2629 D9 F241 B9
2630 F2 F242 C9
2631 E4 F243 C9
3601 B4 F244 C9
3603 B7 F245 C9
3604 C5 F247 D9
3605 C5 F248 E9
3606 D1 F249 E9
3607 E1 F250 B7
3608 D2 F251 E8
3609 E2 I223 D5
3610 C1 I227 D2
3614 E4 I229 E8
3616 B6 I230 B3
3617 B6 I231 E8
3618 B6 I232 C3
3619 B6 I233 E5
3620 B6 I234 E2
3621 B6 I240 C2
3622 E7 I241 E1
3623 E7
3625 E9
3626 E9
3628 E9
3631 E6
3634 E5
3635 D5
3636 D5
3637 D5
3639 C2
4601 E7
4602 C6
4604 B1
4605 D7
4606 D7
4607 E7
4609 D9
4610 C1
4611 B1
4612 C2
4630 F2
5601 F2
5602 E5
6602 E2
6610 C2
7601 B5
7602 D5
7603 A2
7604 E2
7605 D2
7606 E5
7607 E6
9235 E5
9280 F7
9603 F1
9604 B7
9605 C3
9607 D7
9612 E7

## Mono Carrier: Class D - Audio Amplifier

# A6 CLASS D - AUDIO AMP

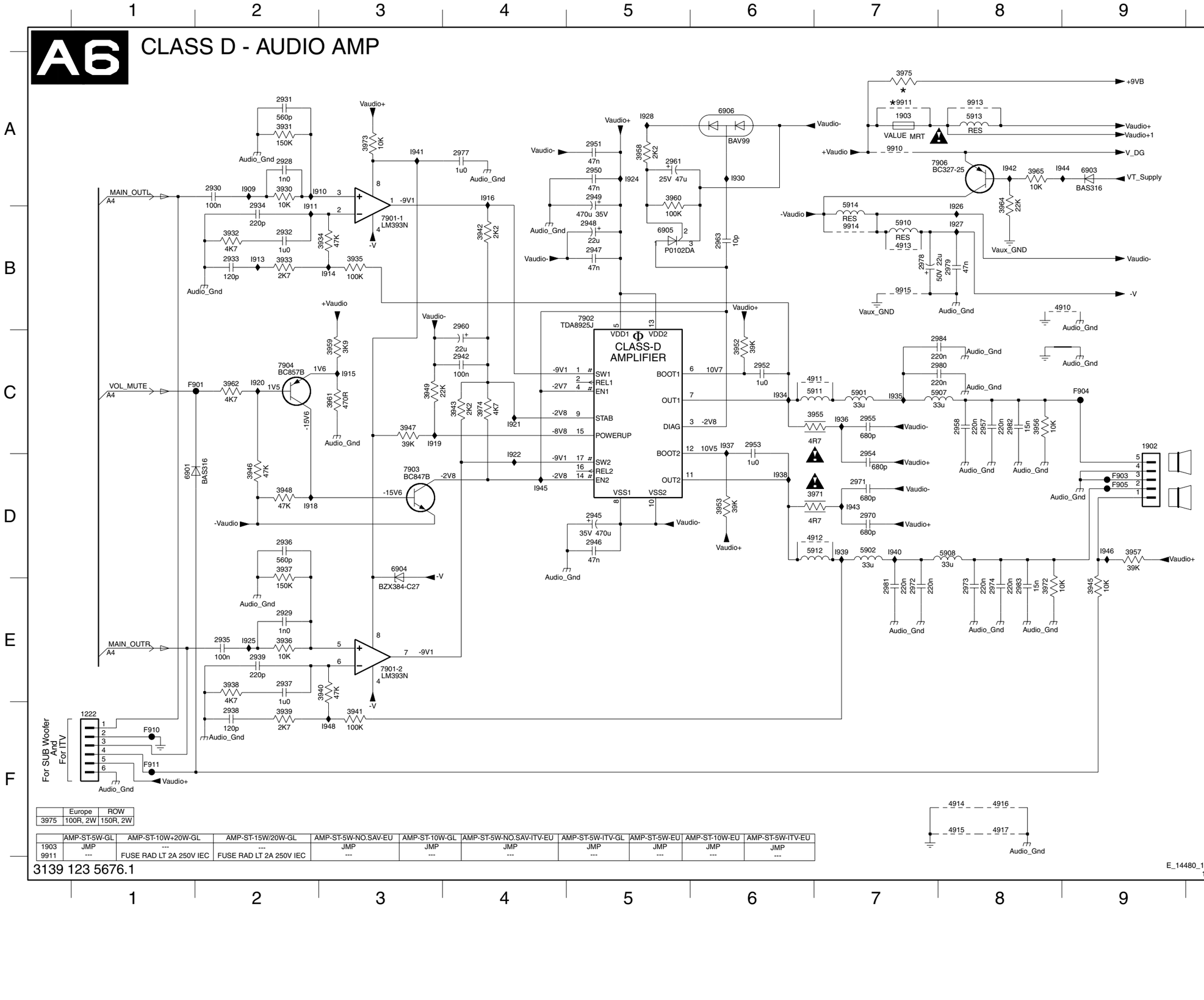


| | Europe | ROW |
|---|---|---|
| 3975 | 100R, 2W | 150R, 2W |

| | AMP-ST-5W-GL | AMP-ST-10W+20W-GL | AMP-ST-15W/20W-GL | AMP-ST-5W-NO.SAV-EU | AMP-ST-10W-GL | AMP-ST-5W-NO.SAV-ITV-EU | AMP-ST-5W-ITV-GL | AMP-ST-5W-EU | AMP-ST-10W-EU | AMP-ST-5W-ITV-EU |
|---|---|---|---|---|---|---|---|---|---|---|
| 1903 | JMP | --- | --- | JMP | JMP | JMP | JMP | JMP | JMP | JMP |
| 9911 | --- | FUSE RAD LT 2A 250V IEC | FUSE RAD LT 2A 250V IEC | --- | --- | --- | --- | --- | --- | --- |

3139 123 5676.1

E_14480_121.eps
100504

| | | | |
|---|---|---|---|
| 1222 F1 | 4911 C7 | 3943 C4 | I936 C7 |
| 1902 C9 | 4912 D7 | 3945 E9 | I937 C6 |
| 1903 A7 | 4913 B7 | 3946 D2 | I938 D6 |
| 2928 A2 | 4914 F8 | 3947 C3 | I939 D7 |
| 2929 E2 | 4915 F8 | 3948 D2 | I940 D7 |
| 2930 A2 | 4916 F8 | 3949 C3 | I941 A3 |
| 2931 A2 | 4917 F8 | 3952 C6 | I942 A8 |
| 2932 B2 | 5901 C7 | 3953 D6 | I943 D7 |
| 2933 B2 | 5902 D7 | 3955 C7 | I944 A9 |
| 2934 B2 | 5907 C8 | 3956 C8 | I945 D4 |
| 2935 E2 | 5908 D8 | 3957 D9 | I946 D9 |
| 2936 D2 | 5910 B7 | 3958 A5 | I948 F3 |
| 2937 E2 | 5911 C7 | 3959 C3 | |
| 2938 F2 | 5912 D7 | 3960 A5 | |
| 2939 E2 | 5913 A8 | 3961 C3 | |
| 2942 C4 | 5914 B7 | 3962 C2 | |
| 2945 D5 | 6901 D1 | 3964 A8 | |
| 2946 D5 | 6903 A9 | 3965 A8 | |
| 2947 B5 | 6904 D3 | 3971 D7 | |
| 2948 B5 | 6905 B5 | 3972 E8 | |
| 2949 A5 | 6906 A6 | 3973 A3 | |
| 2950 A5 | 7901-1 B3 | 3974 C4 | |
| 2951 A5 | 7901-2 E3 | 3975 A7 | |
| 2952 C6 | 7902 B5 | 4910 B9 | |
| 2953 C6 | 7903 D3 | | |
| 2954 D7 | 7904 C2 | | |
| 2955 C7 | 7906 A8 | | |
| 2957 C8 | 9910 A7 | | |
| 2958 C8 | 9911 A7 | | |
| 2960 B4 | 9913 A8 | | |
| 2961 A5 | 9914 B7 | | |
| 2963 B6 | 9915 B7 | | |
| 2970 D7 | F901 C2 | | |
| 2971 D7 | F903 D9 | | |
| 2972 E7 | F904 C9 | | |
| 2973 E8 | F905 D9 | | |
| 2974 E8 | F910 F1 | | |
| 2977 A4 | F911 F1 | | |
| 2978 B7 | I909 A2 | | |
| 2979 B8 | I910 A3 | | |
| 2980 C8 | I911 B2 | | |
| 2981 E7 | I913 B2 | | |
| 2982 C8 | I914 B3 | | |
| 2983 E8 | I915 C3 | | |
| 2984 C8 | I916 A4 | | |
| 3930 A2 | I918 D2 | | |
| 3931 A2 | I919 C3 | | |
| 3932 B2 | I920 C2 | | |
| 3933 B2 | I921 C4 | | |
| 3934 B3 | I922 D4 | | |
| 3935 B3 | I924 A5 | | |
| 3936 E2 | I925 E2 | | |
| 3937 D2 | I926 B8 | | |
| 3938 E2 | I927 B8 | | |
| 3939 F2 | I928 A5 | | |
| 3940 E3 | I930 A6 | | |
| 3941 F3 | I934 C6 | | |
| 3942 B4 | I935 C7 | | |

## Mono Carrier: Audio Amplifier

# A7 AUDIO AMPLIFIER

MAIN_OUTL
A4
F950
2985 RES
3985 1K0
I953
2989 220n
3988 4K7
2990 1n0
I951

MAIN_OUTR
A4
F951
2991 RES
3991 1K0
I954
2992 220n
3992 4K7
2993 1n0
I952

7990 TDA2616Q
+16V 7
VP+
1 INV1-
2 MUTE
+16V 3 V|GND
9 INV2-
8 INV12
VP-
5 -16V
OUT1 4
OUT2 6

Vaudio+1
2987 100n
2986 100n
-Vaudio
2988 100n

AmpOutL
2994 22n
I956
3989 10R
2996 47n
Audio_Gnd
AmpOutR
2995 22n
I957
3993 10R
2997 47n
Audio_Gnd

F952
F955
F953
Audio_Gnd
1280
1281
8 ohm / 15W
8 ohm / 15W

3995 47K
I955

Vaudio+1
3994 68K
7992 BC847B
0V7
7991 BC847B
16V
2916 4u7
3996 68K

VOL_MUTE
A4
I958

3997 820K
7993 BC847B

TO 1683 OF A4
POWER_DOWN 6990
1282
BAS316
I959
2911 4u7
2912 4u7
2913 4u7
2914 4u7
2915 4u7
3999 120K

Stdby_Con
3998 10K
7994 BC847B

MUTING
A5

I951 50mV / div AC 2ms / div
I952 50mV / div AC 2ms / div
F952 500mV / div AC 2ms / div
F955 500mV / div AC 2ms / div

3139 123 5676.1

E_14480_122.eps
280504

1280 B9
1281 B9
1282 D2
2911 D3
2912 D3
2913 D3
2914 D3
2915 D3
2916 C5
2985 A4
2986 A7
2987 A6
2988 C6
2989 B4
2990 B5
2991 B4
2992 B4
2993 C5
2994 B7
2995 C7
2996 B8
2997 C8
3985 B4
3988 B4
3989 B8
3991 B4
3992 C4
3993 C8
3994 C4
3995 C5
3996 C5
3997 D4
3998 E2
3999 D4
6990 D2
7990 A6
7991 C5
7992 C4
7993 D4
7994 E2
F950 B3
F951 B3
F952 B9
F953 B9
F955 B9
I951 B5
I952 B5
I953 B4
I954 B4
I955 C5
I956 B8
I957 C8
I958 C3
I959 D3

## Mono Carrier: Rear I/O Scart

# A8 REAR I/O SCART

**SCART 1** 1735-1

Audio-R_out, Audio-R_in, Audio-L_out, Audio-L_in, RGB-B_in, Function_Sw, RGB-G_in, RGB-R_in, RGB-BL_in, Terr_CVBS_out, Video_in

**SCART 2** 1735-2

Audio-R_out, Audio-R_in, Audio-L_out, Audio-L_in, Function_Sw, YC-C_in, CVBS_out, Video/YC-Y_in

7706 BC847B, 7707 BC847B, 7708 BC847B, 7709 BC847B, 1764, FOR ITV ONLY 1727

TO 1240 OF A8

SC1_R_OUT, SC1_R_IN, SC1_L_OUT, SC1_L_IN, SC1_BLUE_IN, SC1_STATUS, SC1_GREEN_IN, SC1_RED_IN, SC1_FBL, SC1_CVBS_OUT, SC1_CVBS_IN

SC2_R_OUT, SC2_R_IN, SC2_L_OUT, SC2_L_IN, SC2_STATUS|ITV_MSG, SC2_CHROMA_IN, SC2_CVBS_OUT, SC2_Y|CVBS_IN

FOR ITV ONLY 1765, 1769, 1766, 1767, 1768, 1729

7701 BC847B, 7705-1 IMT1A, 7705-2 IMT1A, 7702 BC847B, 7703 BC847B

Vbuffer, MAIN_OUTR, MAIN_OUTL

TO 1240 OF A5 — MUTING 1763

SPDIF 1728

MONITOR OUTPUT: Woofer, LEFT, RIGHT — LPR6520-M920F BLACK-WHITE-RED

FOR ITV ONLY — TO 1684 OF A4 1770

FOR ITV ONLY 1762 — SC2_STATUS|ITV_MSG, SC1_FBL

| ITEM | SINGLE SCART IN-DVD | DUAL SCART IN |
|---|---|---|
| 2731 | --- | 390pF |
| 2732 | --- | 390pF |
| 2733 | --- | 4u7 |
| 2734 | --- | 390pF |
| 2735 | --- | 390pF |
| 2736 | --- | 4u7 |
| 2737 | --- | 390pF |
| 2738 | --- | 390pF |
| 2739 | --- | 4u7 |
| 2740 | --- | 390pF |
| 2741 | --- | 390pF |
| 2742 | --- | 4u7 |
| 2743 | --- | 330pF |
| 2744 | --- | 330pF |
| 2745 | --- | 22pF |
| 2747 | --- | 22pF |
| 3721 | 75R | --- |
| 3731 | --- | 150R |
| 3732 | --- | 220K |
| 3733 | --- | 150R |
| 3734 | --- | 47K |
| 3735 | --- | 150R |
| 3736 | --- | 220K |
| 3738 | --- | 47K |
| 3739 | --- | 27K |
| 3740 | --- | 6K8 |
| 3741 | --- | 75R |
| 3742 | --- | 100R |
| 3743 | --- | 68R |
| 3744 | --- | 1K |
| 3746 | --- | JMP |
| 4705 | JMP | --- |

| ITEM | WITH MON. OUT | WITHOUT MON.OUT |
|---|---|---|
| 2731 | 330pF | --- |
| 2752 | 4u7 | --- |
| 2753 | 330pF | --- |
| 2754 | 4u7 | --- |
| 3751 | 150R | --- |
| 3752 | 220K | --- |
| 3753 | 150R | --- |
| 3754 | 220K | --- |
| 7731 | BC847B | --- |

3139 123 5676.1

E_14480_123.eps 260504

| | | |
|---|---|---|
| 1101 A3 | 3733 B9 | I716 B8 |
| 1102 B3 | 3734 B8 | I717 B8 |
| 1103 B3 | 3735 B9 | I718 B8 |
| 1104 C3 | 3736 B8 | I719 D7 |
| 1105 C3 | 3737 C9 | I720 F10 |
| 1106 D3 | 3738 C8 | I721 F9 |
| 1107 C2 | 3739 C9 | I722 E5 |
| 1108 D3 | 3740 C8 | I727 F8 |
| 1109 C2 | 3741 D9 | I728 F8 |
| 1110 E3 | 3742 D7 | I729 A5 |
| 1111 E3 | 3743 D9 | I730 A5 |
| 1112 F3 | 3745 E9 | I731 B5 |
| 1113 F3 | 3746 E7 | I732 B5 |
| 1131 A9 | 3751 F10 | I733 B7 |
| 1132 B9 | 3752 F9 | I734 B7 |
| 1133 B9 | 3753 F10 | I735 A7 |
| 1134 C9 | 3754 F9 | I736 A7 |
| 1135 B10 | 3756 E10 | I739 E7 |
| 1136 C9 | 3757 E10 | |
| 1137 C10 | 3758 E5 | |
| 1138 C10 | 3761 E10 | |
| 1139 D9 | 3762 D10 | |
| 1140 C10 | 3764 E9 | |
| 1141 D9 | 3766 G8 | |
| 1142 E9 | 3767 F8 | |
| 1151 F10 | 3768 F8 | |
| 1152 F10 | 3769 E8 | |
| 1153 E10 | 3770 F11 | |
| 1727 A7 | 3771 F11 | |
| 1728 D11 | 4701 A3 | |
| 1729 E7 | 4702 B3 | |
| 1734 E11 | 4706 B7 | |
| 1735-1 A1 | 4707 A9 | |
| 1735-2 A11 | 4708 B9 | |
| 1762 G5 | 6706 F3 | |
| 1763 E9 | 6732 E9 | |
| 1764 A6 | 6733 D9 | |
| 1765 C5 | 7701 F5 | |
| 1766 D5 | 7702 F9 | |
| 1767 D5 | 7703 G9 | |
| 1768 E5 | 7705-1 F8 | |
| 1769 C4 | 7705-2 F8 | |
| 1770 G4 | 7706 A6 | |
| 2702 A4 | 7707 A6 | |
| 2703 A5 | 7708 A8 | |
| 2705 B4 | 7709 A9 | |
| 2706 B5 | 9710 C5 | |
| 2708 B4 | 9714 D5 | |
| 2709 B5 | 9716 E5 | |
| 2711 C4 | 9722 F4 | |
| 2712 C5 | 9742 D7 | |
| 2732 A8 | 9746 D7 | |
| 2733 A7 | F701 A3 | |
| 2735 B8 | F702 B3 | |
| 2736 B7 | F703 B5 | |
| 2738 B8 | F704 C3 | |
| 2739 B7 | F705 C3 | |
| 2741 C8 | F706 D3 | |
| 2742 C7 | F707 D3 | |
| 2751 F10 | F708 E3 | |
| 2752 F9 | F709 E3 | |
| 2753 F10 | F710 F3 | |
| 2754 F9 | F711 A2 | |
| 2755 F10 | F712 F3 | |
| 2756 F10 | F713 F5 | |
| 2757 E10 | F714 C2 | |
| 2759 F5 | F715 D11 | |
| 2760 E5 | F716 E10 | |
| 2763 E10 | F717 F11 | |
| 3701 A4 | F718 F10 | |
| 3702 A4 | F719 F10 | |
| 3703 B4 | F731 A9 | |
| 3704 B4 | F732 B9 | |
| 3705 B4 | F733 B9 | |
| 3706 B4 | F734 C9 | |
| 3707 C4 | F735 C9 | |
| 3708 C4 | F736 D9 | |
| 3709 C4 | F737 D10 | |
| 3710 C5 | F738 C8 | |
| 3711 D4 | F739 E9 | |
| 3712 D4 | F751 F7 | |
| 3713 D4 | F752 F7 | |
| 3714 D5 | I701 A5 | |
| 3715 E4 | I702 B5 | |
| 3716 E5 | I704 C5 | |
| 3717 E4 | I705 C5 | |
| 3718 E5 | I707 D5 | |
| 3719 F3 | I709 D5 | |
| 3720 F4 | I710 E4 | |
| 3721 F4 | I711 E5 | |
| 3722 F4 | I713 E5 | |
| 3731 A9 | I714 F5 | |
| 3732 A8 | I715 A8 | |

## Mono Carrier: Front Control

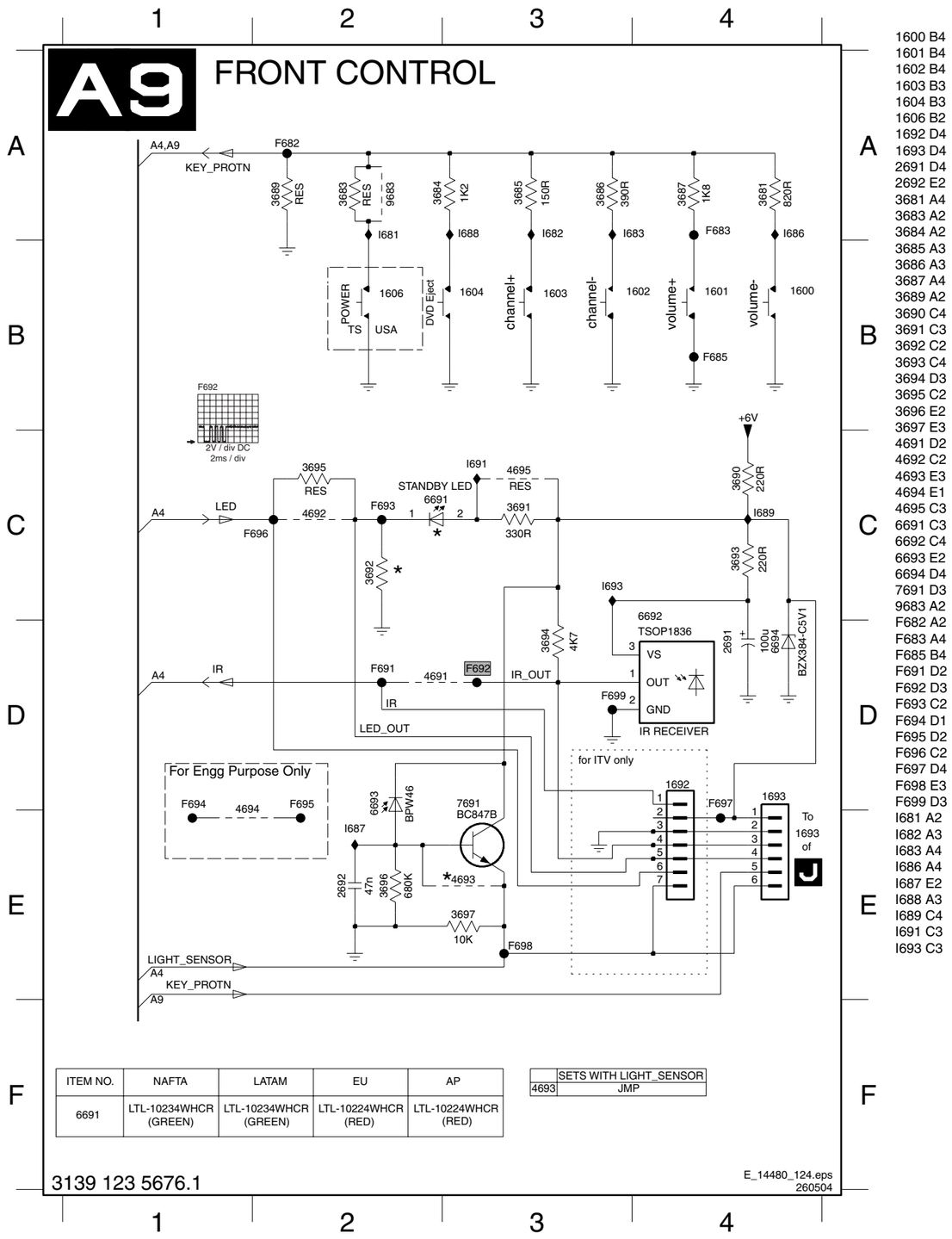


| ITEM NO. | NAFTA | LATAM | EU | AP |
|---|---|---|---|---|
| 6691 | LTL-10234WHCR (GREEN) | LTL-10234WHCR (GREEN) | LTL-10224WHCR (RED) | LTL-10224WHCR (RED) |

| | SETS WITH LIGHT_SENSOR |
|---|---|
| 4693 | JMP |

3139 123 5676.1

E_14480_124.eps
260504

1600 B4
1601 B4
1602 B4
1603 B3
1604 B3
1606 B2
1692 D4
1693 D4
2691 D4
2692 E2
3681 A4
3683 A2
3684 A2
3685 A3
3686 A3
3687 A4
3689 A2
3690 C4
3691 C3
3692 C2
3693 C4
3694 D3
3695 C2
3696 E2
3697 E3
4691 D2
4692 C2
4693 E3
4694 E1
4695 C3
6691 C3
6692 C4
6693 E2
6694 D4
7691 D3
9683 A2
F682 A2
F683 A4
F685 B4
F691 D2
F692 D3
F693 C2
F694 D1
F695 D2
F696 C2
F697 D4
F698 E3
F699 D3
I681 A2
I682 A3
I683 A4
I686 A4
I687 E2
I688 A3
I689 C4
I691 C3
I693 C3

***Personal Notes:***

E_06532_012.eps
130204

## Mono Carrier: DVD Power Supply

# A1 Ø DVD POWER SUPPLY

ITV only
Vaux
3585 100R
2581 100u 25V
2582 220n
3581 22K
I582
I583
7581
L4978
VCC
OSC
SS_INH
COMP
GND
BOOT
FB
OUT
I587
I588
I584
I585
3584 2K7
F581
5581 47u
6581 SB340
2587 1n0
2586 100n
2588 1m0 16V
3583 4K7
3582 8K2
2583 2n2
2584 100n
2585 22n
Vaux_GND
1582
1581
F582
F583
Vaux_GND
+5V
ITV only
DVD/IDTV
+9VA
+9VB
4581
7582
L78L08ACZ
IN
OUT
COM
2589 2u2
2590 2u2
MainSupplyGnd

1581 A6
1582 A6
2581 B2
2582 B2
2583 C2
2584 C2
2585 C3
2586 B4
2587 B4
2588 B5
2589 C1
2590 C2
3581 B2
3582 C3
3583 B5
3584 B5
3585 B1
4581 C2
5581 B5
6581 B4
7581 A3
7582 C2
F581 B6
F582 B6
F583 B6
I582 B2
I583 B3
I584 B3
I585 C3
I587 B4
I588 B4

3139 123 5676.1

E_14480_125.eps
100504

## Layout Mono Carrier: (Top Side)

1000 E8 1207 E7 1243 C6 1500 A2 1542 C4 1684 D6 1767 D7 2230 D6 2413 B6 2460 A7 2504 A4 2539 C3 2570 B4 2754 E8 3234 C6 3278 D7 3431 C6 3461 C7 3501 B1 3515 A5 3574 B5 3701 C8 3722 D8 3757 D8 5402 B6 5503 A3 5581 D4 6406 A6 6491 A6 9263 E7 9633 C7
1001 E6 1208 D7 1245 D6 1501 A2 1543 C4 1692 C1 1768 E7 2234 D6 2415 A5 2463 C8 2505 A4 2540 C3 2581 C4 2945 D2 3239 C7 3291 D7 3432 B7 3466 C7 3502 A1 3516 A4 3575 B5 3703 C8 3731 C8 3758 D7 5403 B5 5511 A4 5602 D7 6410 A6 6500 A4 9264 C7 9637 E7
1002 E5 1212 C6 1280 E3 1502 B2 1545 C4 1693 C1 1769 D8 2240 E5 2416 B6 2465 C8 2506 A3 2541 C3 2588 C4 2948 D2 3241 E5 3401 C6 3433 B6 3467 C7 3503 B1 3519 B4 3577 B5 3705 C8 3733 C8 3943 C2 5404 B8 5512 B4 5901 D2 6411 A6 6511 A5 9265 C7 9639 E4
1003 E5 1213 C5 1281 E3 1503 C3 1581 D4 1727 C7 1770 D8 2250 D6 2417 A6 2467 C7 2507 A3 2542 B4 2611 E4 2949 D2 3246 D5 3402 A7 3434 B6 3468 C7 3504 B2 3520 A4 3584 C4 3707 C8 3735 C8 3945 D3 5405 B5 5512C B4 5902 D2 6412 A6 6535 C4 9266 C7 9642 D7
1004 E7 1219 C7 1282 D3 1504 C2 1582 C3 1728 D8 1902 D2 2251 E5 2418 A5 2481 A7 2508 C2 2543 B3 2621 E5 2960 D2 3249 D7 3407 A7 3440 C5 3470 C8 3505 A2 3521 A5 3585 D4 3709 D8 3737 C8 3961 C3 5406 B6 5512D B4 5907 D1 6452 C7 6536 C3 9267 D7 9643 D5
1005 E8 1220 E4 1401 C7 1505 A2 1600 C1 1729 D7 1903 D3 2265 E6 2419 B6 2484 A8 2509 C1 2545 B3 2624 E5 2961 D1 3252 D5 3411 A6 3441 B6 3471 C7 3506 B1 3523 B2 3589 C5 3710 D8 3739 D8 3962 D3 5408 B6 5531 B4 5908 D2 6453 B7 6537 C3 9268 D7 9653 D4
1010 E7 1221 C5 1402 A6 1601 C1 1734 D8 2005 E5 2273 E6 2427 B6 2486 B6 2511 A5 2546 B3 2631 D7 2978 C3 3258 D7 3412 A6 3442 A7 3472 C7 3507 B3 3529 B3 3603 C6 3713 D8 3741 D8 3975 D3 5410 B6 5532 B3 5913 D3 6454 B8 6540 B3 9269 C4 9660 C1
1011 E7 1222 D3 1404 A5 1507 C2 1602 D1 1735 D8 2006 E7 2275 E6 2451 A8 2492 B6 2514 A4 2551 B5 2691 B1 3020 E7 3260 D5 3414 C6 3443 A7 3482 B8 3508 A3 3531 B4 3606 E4 3714 D8 3742 D7 5201 D5 5450 B7 5536 C4 5914 D3 6455 B8 6551 C5 9271 E5 9661 C1
1012 E6 1230 D5 1451 C7 1508 A2 1603 D1 1762 D7 2008 E8 2404 B6 2454 A8 2493 A7 2528 B4 2552 C5 2703 C7 3201 D5 3270 D7 3415 B6 3447 A7 3483 B8 3509 B2 3532 B3 3616 C6 3715 D8 3743 D7 5208 D6 5451 B7 5537 C4 6001 E8 6456 A8 6562 B4 9272 D4 9662 B1
1013 E8 1234 D5 1452 A8 1509 C2 1604 C1 1763 E8 2203 D5 2405 A6 2455 A8 2500 A2 2534 B3 2561 C4 2709 C7 3215 D5 3274 D7 3417 A6 3451 B6 3484 B8 3510 B2 3534 B4 3617 C6 3716 D8 3745 D8 5216 D6 5452 A8 5551 B5 6006 E7 6459 B8 6563 C4 9273 D4 9663 C1
1204 C6 1240 D4 1453 B5 1510 B1 1606 A1 1764 C7 2217 E5 2406 A6 2457 C7 2501 C2 2535 C3 2562 B4 2733 C7 3224 E5 3275 E7 3418 C5 3454 A8 3485 B8 3511 B5 3542 B3 3618 C6 3717 D8 3746 D7 5217 D7 5500 B2 5552 B5 6401 A6 6480 B8 6573 B5 9274 D4 9664 C1
1205 D5 1241 D5 1454 B7 1532 B3 1682 D4 1765 C7 2218 D6 2411 B6 2458 C7 2502 C2 2536 C3 2563 C4 2739 C7 3230 D4 3276 C7 3425 C5 3458 B7 3497 C5 3513 A5 3563 C4 3639 E4 3718 D8 3751 E8 5295 C5 5501 B2 5561 B4 6403 C6 6481 B8 6575 A4 9275 C5 9665 B1
1206 D5 1242 E4 1470 A8 1535 C5 1683 C5 1766 D7 2224 E5 2412 A6 2459 A8 2503 A4 2537 C3 2565 C4 2752 E7 3231 D6 3277 C7 3430 B6 3460 B7 3500 B1 3514 A5 3571 B5 3683 B1 3721 D8 3753 E8 5401 A6 5502 A3 5562 B4 6404 A6 6486 C6 6581 D4 9276 D5 9666 C1
6691 A1 9277 C6 9683 B1
6692 B1 9278 D4 9688 E4
6693 B1 9279 D4 9689 E4
6905 D1 9280 D5 9690 E4
7203 E5 9290 E6 9694 E6
7204 E5 9294 C6 9695 E4
7401 A6 9296 C5 9696 D4
7405 B6 9297 C4 9710 D8
7406 C5 9298 C5 9714 D8
7451 C8 9299 C5 9716 D8
7452 C8 9401 B5 9720 D7
7453 C7 9402 B6 9721 D7
7512 A4 9404 B8 9722 D8
7513 B5 9407 B6 9723 D8
7531 B3 9410 B6 9724 D7
7571 B5 9417 A5 9728 D7
7581 D4 9451 B7 9729 D7
7582 D4 9452 A8 9742 D7
7601 D5 9460 B6 9746 D7
7603 E4 9466 B5 9910 C3
7605 E5 9467 B6 9911 D3
7902 C2 9469 C5 9913 D3
7906 C3 9470 C6 9914 D3
7990 E3 9473 C5 9915 C3
9002 E7 9474 C5 9920 D3
9201 E6 9475 C5 9921 D3
9202 E4 9476 C5 9924 D2
9203 E6 9477 C6 9926 D3
9204 E7 9478 C6 9927 D2
9205 D4 9479 C6 9933 D3
9206 D4 9480 C6 9935 D3
9207 D4 9481 C6 9936 C3
9208 D4 9482 C7 9937 C3
9209 C5 9483 C8 9939 D3
9210 E7 9484 C7 9940 C3
9211 D7 9485 C7 9941 D3
9212 E7 9486 B7 9942 D3
9213 D7 9487 B8 9943 D3
9214 D4 9488 A8 9944 D3
9215 E7 9489 B8 9946 C2
9216 D4 9490 A8
9217 D6 9491 A6
9218 E6 9492 C6
9219 D6 9500 A2
9220 D5 9501 B2
9221 D5 9502 B2
9222 E5 9503 B2
9223 E6 9504 B2
9224 D5 9505 B3
9225 D4 9506 A3
9226 D4 9507 A2
9227 D5 9508 A2
9228 D4 9509 C4
9229 D5 9510 C4
9230 D5 9511 B2
9231 E6 9512 B3
9232 E5 9513 B5
9233 E6 9514 C4
9234 E7 9532 B3
9235 D7 9536 C4
9236 C5 9537 C4
9237 D6 9570 A3
9238 D7 9573 C2
9239 E6 9574 B4
9240 E5 9575 C3
9241 C6 9576 A4
9242 D4 9577 B5
9243 C4 9578 B3
9244 E6 9579 C3
9245 E4 9582 C4
9246 E6 9583 C4
9247 E4 9584 B4
9248 E6 9585 A4
9249 D4 9586 C4
9250 E6 9587 B4
9251 E5 9589 C5
9252 C5 9590 C5
9253 D5 9591 C3
9254 C7 9592 C3
9255 C7 9593 C4
9257 D7 9603 C7
9258 C7 9604 C6
9259 D7 9605 E6
9260 D7 9607 D7
9261 D7 9612 E4
9262 D7 9631 C6

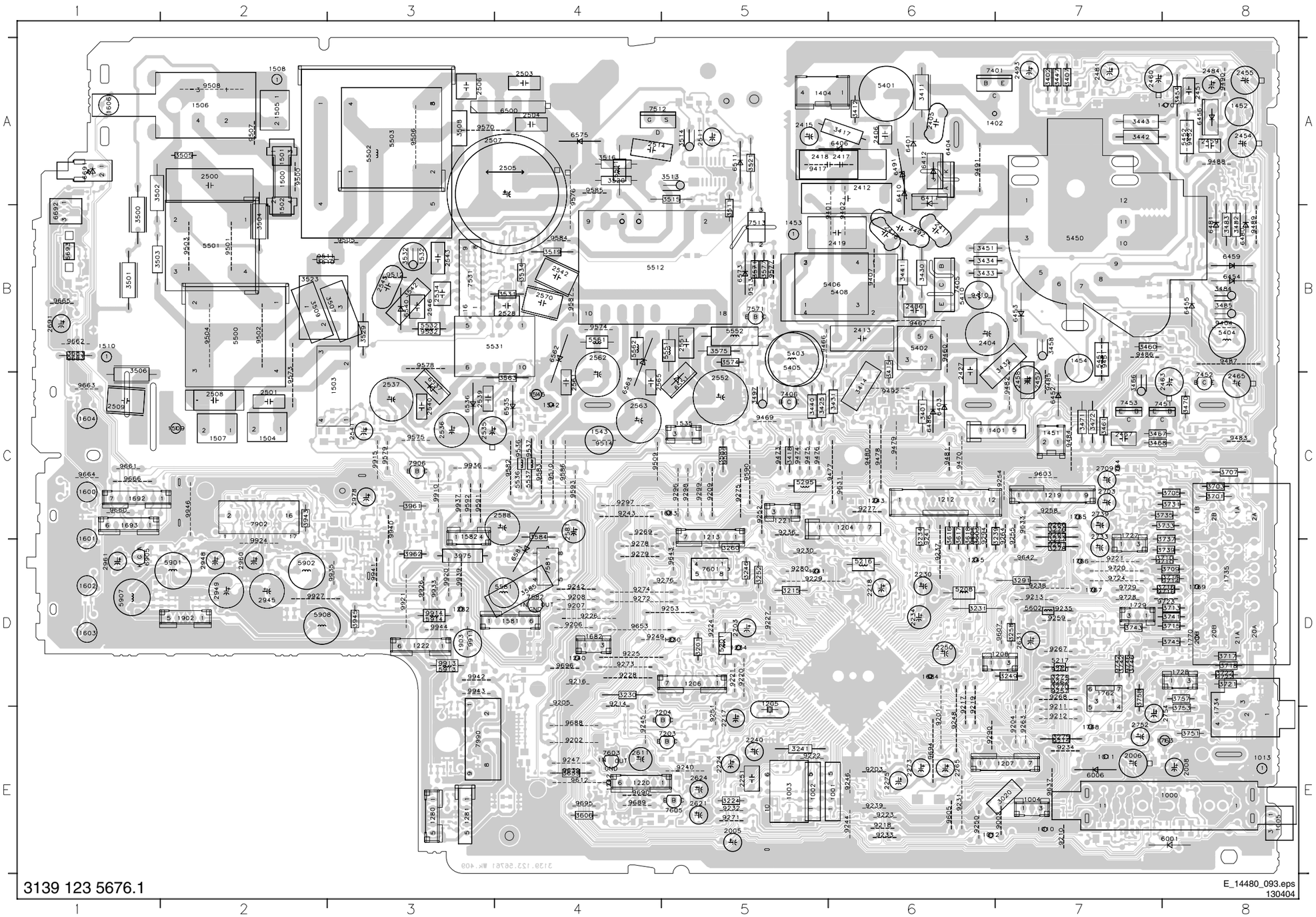

## Layout Mono Carrier (Overview Bottom Side)

2001 A8 2207 A4 2223 B6 2239 A5 2254 A6 2267 A6 2282 B5 2409 D6 2469 D7 2515 D5 2548 C4 2585 B4 2623 A5 2711 C8 2757 B8 2930 B3 2947 C2 2972 B2 2987 A3 3001 A8 3018 A7 3212 B5 3227 B6 3244 A6 3261 B4 3279 B5 3293 B6 3423 D7 3463 D8 3486 D8 3512 E5 3947 C2 4696 C1 7207 B6
2002 A8 2208 A4 2225 B6 2241 A5 2255 A7 2268 A5 2283 A6 2410 C6 2470 C8 2516 E5 2549 D3 2586 B4 2625 A4 2712 C8 2759 B7 2931 C3 2950 B2 2973 B2 2988 A3 3002 A8 3019 A7 3214 B5 3228 B6 3245 C5 3262 B5 3280 B5 3294 C6 3427 D7 3464 C8 3487 E7 3517 E5 3948 C3 4701 C8 7208 B6
2003 A7 2209 B5 2226 A5 2242 B6 2256 A6 2269 A5 2284 A6 2414 C6 2480 E8 2517 E5 2550 D3 2587 B4 2626 C6 2732 C7 2760 B8 2932 C3 2951 C2 2974 B2 2989 B3 3003 A7 3202 B5 3216 B6 3229 B6 3247 A6 3263 B5 3281 B5 3295 A5 3428 D7 3465 C8 3488 E7 3518 E5 3949 C2 4702 C8 7209 A5
2004 A7 2210 B5 2227 A5 2243 B6 2257 A6 2270 A6 2285 A6 2420 C6 2482 C5 2518 E5 2553 D4 2589 B4 2627 B6 2735 C7 2763 A8 2933 C3 2952 C2 2977 C2 2990 A3 3004 A8 3203 A5 3217 A5 3232 A5 3248 B7 3264 B5 3282 B5 3296 A5 3436 D5 3469 C8 3489 C6 3522 E5 3952 C2 4706 B7 7210 A5
2007 A7 2211 B6 2229 B6 2244 A5 2258 B6 2271 A6 2286 B6 2425 C6 2483 E8 2519 E5 2564 C4 2590 B4 2628 B6 2736 B7 2911 A4 2934 C3 2953 C2 2979 C3 2991 A3 3005 A7 3204 B5 3218 B5 3233 C6 3250 B7 3265 B5 3283 B5 3297 A6 3437 C7 3473 E8 3490 E8 3524 E5 3953 C2 4707 C8 7403 E7
2009 A7 2212 B5 2231 B6 2245 A5 2259 B5 2272 A6 2287 B6 2428 D7 2487 D6 2530 D4 2566 C4 2601 B5 2629 B6 2738 C7 2912 A4 2935 B3 2954 B2 2980 B1 2992 A3 3006 A5 3205 A5 3219 B5 3235 A5 3251 A6 3266 B5 3284 B5 3298 B5 3445 C5 3474 C7 3491 E8 3527 D4 3955 B2 4708 C8 7404 C6
2013 A7 2213 B5 2232 B6 2246 B6 2260 A6 2274 A6 2288 B4 2453 E8 2488 C5 2531 D4 2571 D5 2613 B5 2630 C7 2741 B7 2913 A4 2936 B3 2955 B2 2981 B2 2993 A3 3007 A5 3206 A5 3220 B6 3236 A5 3253 A6 3267 A6 3285 A4 3404 E6 3446 C5 3475 C7 3492 E8 3528 D4 3956 B2 4730 C7 7408 C6
2014 A7 2214 A5 2233 B6 2247 B6 2261 A6 2276 A6 2289 B4 2456 D8 2489 D6 2532 D4 2572 C5 2614 B7 2692 D1 2742 B7 2914 A4 2937 B3 2957 B1 2982 B2 2994 A3 3008 A7 3207 B5 3221 B6 3237 A5 3254 A6 3268 B7 3287 B5 3409 E8 3452 D7 3476 E7 3493 E8 3530 D3 3957 B3 4910 B3 7410 C6
2016 A7 2215 B6 2235 A5 2248 A5 2262 B6 2277 B5 2290 A5 2461 D7 2490 D8 2533 D3 2573 D5 2615 B7 2702 C8 2751 A8 2915 A4 2938 B3 2958 B2 2983 B2 2995 A3 3009 A5 3208 A4 3222 A6 3238 B6 3255 A6 3269 B5 3288 B5 3416 D6 3453 E7 3477 E8 3494 E8 3533 D3 3958 B1 4911 B2 7411 C6
2204 A5 2216 B6 2236 A5 2249 B6 2263 A6 2278 A5 2402 E8 2462 D7 2491 E8 2538 C4 2582 C4 2617 B7 2705 C8 2753 A8 2916 B3 2939 B3 2963 B2 2984 B2 2996 A3 3010 A7 3209 A4 3223 A4 3240 B6 3256 A6 3271 B6 3289 B6 3419 E7 3456 D8 3478 D8 3495 C6 3535 C3 3959 C3 4912 B2 7454 C8
2205 B5 2221 A5 2237 B6 2252 B6 2264 B6 2279 B5 2403 E8 2464 C8 2512 E5 2544 D4 2583 B4 2620 A5 2706 C8 2755 A8 2928 C3 2942 C2 2970 B2 2985 B3 2997 A3 3014 A7 3210 A4 3225 B6 3242 B6 3257 B7 3272 B6 3290 C6 3420 C6 3459 D7 3480 E7 3498 C6 3536 C3 3960 B1 4913 C2 7455 D8
2206 B5 2222 A5 2238 A5 2253 A6 2266 A6 2280 B5 2408 C6 2468 C8 2513 E5 2547 C4 2584 B4 2622 B7 2708 C7 2756 B8 2929 B3 2946 B2 2971 B2 2986 A3 3000 A8 3016 A7 3211 A4 3226 B6 3243 A5 3259 B5 3273 B6 3292 B6 3422 D8 3462 D8 3481 D8 3499 C6 3537 D3 3964 C3 4914 A4 7456 D8
3538 D3 3965 C3 4915 A4 7480 E7
3539 D3 3971 B2 4916 A4 7481 D8
3541 C3 3972 B2 4917 A4 7482 C5
3565 C4 3973 B2 4921 C2 7483 E8
3572 C5 3974 C2 5001 A7 7484 C5
3573 D5 3985 B3 5002 A7 7485 E7
3576 D5 3988 A3 5003 A5 7511 E5
3578 D5 3989 A3 5202 B5 7514 E5
3579 D5 3991 A3 5203 B5 7532 D4
3581 B4 3992 A3 5205 B6 7535 C3
3582 B4 3993 A3 5206 B5 7536 C3
3583 B4 3994 B3 5207 B5 7541 C2
3601 B5 3995 A3 5209 A5 7561 C4
3604 B5 3996 B4 5210 B6 7573 C5
3605 B5 3997 B4 5211 A6 7602 B7
3607 A4 3998 A4 5212 A6 7604 A4
3608 A5 3999 A4 5213 B6 7606 B7
3609 A4 4000 A8 5214 A5 7607 B7
3610 A4 4001 A8 5215 B5 7691 D1
3614 B7 4002 A5 5513 D5 7701 B8
3619 C6 4003 A7 5533 D4 7702 A7
3620 C6 4004 A5 5534 C4 7703 A8
3621 C6 4005 A7 5535 C4 7705 A7
3622 A4 4006 A8 5601 C7 7706 C7
3623 A4 4010 A7 5910 C2 7707 C7
3625 B5 4011 A6 5911 B2 7708 C7
3626 B5 4012 A6 5912 B2 7709 C7
3628 B5 4013 A6 6002 A8 7901 C3
3631 B7 4015 A8 6003 A8 7903 C3
3634 B7 4209 A6 6004 A5 7904 C3
3635 B7 4210 B6 6201 A4 7991 B3
3636 B7 4211 B6 6202 B6 7992 B3
3637 B7 4212 B5 6203 B6 7993 B4
3681 C1 4213 B6 6204 A6 7994 A4
3684 C1 4214 C6 6205 C6
3685 B1 4219 B5 6207 A5
3686 B1 4221 B5 6208 C5
3687 C1 4222 A5 6209 C4
3689 C1 4223 A6 6210 B5
3690 C2 4224 A5 6211 B5
3691 E1 4226 A5 6407 D5
3692 E1 4227 A6 6408 D5
3693 D1 4240 C4 6441 D6
3694 E1 4241 C4 6442 D6
3695 D1 4437 C7 6443 C5
3696 D1 4470 E8 6450 E7
3697 D1 4471 E8 6451 E7
3702 C7 4472 E7 6457 C7
3704 C8 4473 E8 6458 C8
3706 C7 4474 C6 6482 C5
3708 C8 4492 E8 6483 C7
3711 C8 4533 E5 6484 D6
3712 C8 4534 C4 6488 D7
3719 B8 4535 C4 6489 D7
3720 B8 4536 C3 6490 E7
3732 C7 4537 C4 6512 D5
3734 C7 4538 C3 6514 E5
3736 C7 4581 B4 6531 D3
3738 C8 4601 A4 6532 D4
3740 B8 4602 C6 6533 D4
3752 A7 4604 A4 6534 D4
3754 B8 4605 C7 6538 D4
3756 B8 4606 C7 6541 C3
3761 A8 4607 A4 6564 C4
3762 B8 4609 A6 6565 C4
3764 A7 4610 A4 6566 C4
3766 B7 4611 B4 6571 C5
3767 A7 4612 A5 6572 D5
3768 A7 4620 C7 6576 C3
3769 A7 4630 C7 6602 A4
3770 A8 4631 B4 6610 A5
3771 B8 4635 C7 6694 C1
3930 C3 4637 B6 6706 B8
3931 C3 4642 A7 6732 B8
3932 C3 4644 A7 6733 B8
3933 C3 4645 B6 6901 B3
3934 C3 4646 B5 6903 C3
3935 C2 4648 B7 6904 C2
3936 B3 4649 A4 6906 B2
3937 B3 4650 B4 6990 B4
3938 B3 4651 B4 7001 A5
3939 B3 4691 C1 7003 A7
3940 B3 4692 D1 7200 B6
3941 B2 4693 D1 7201 A5
3942 C2 4694 C1 7202 A5
3946 B3 4695 E1 7205 C5

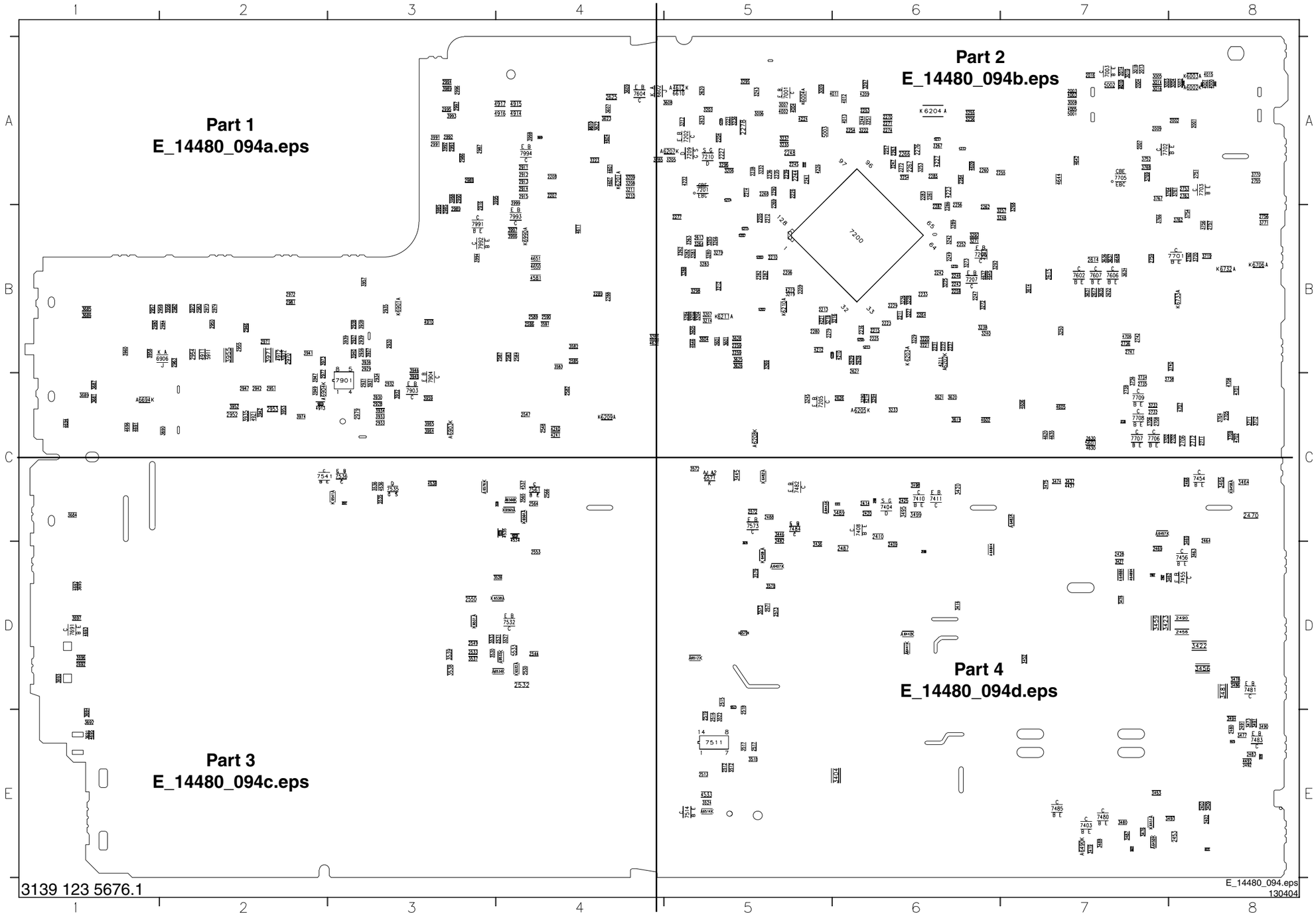

## Layout Mono Carrier (Part 1 Bottom Side)

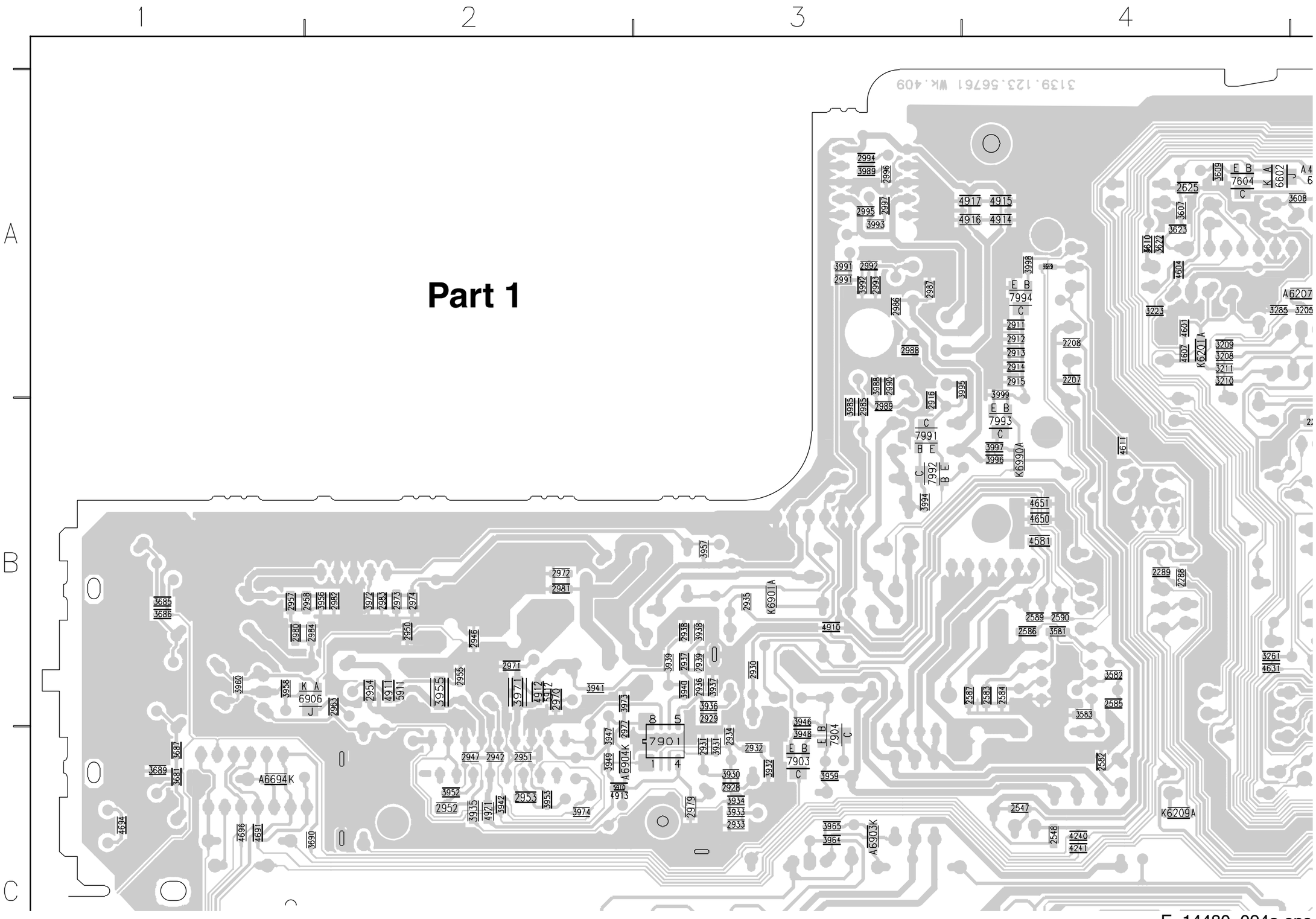


E_14480_094a.eps
130404

## Layout Mono Carrier (Part 2 Bottom Side)

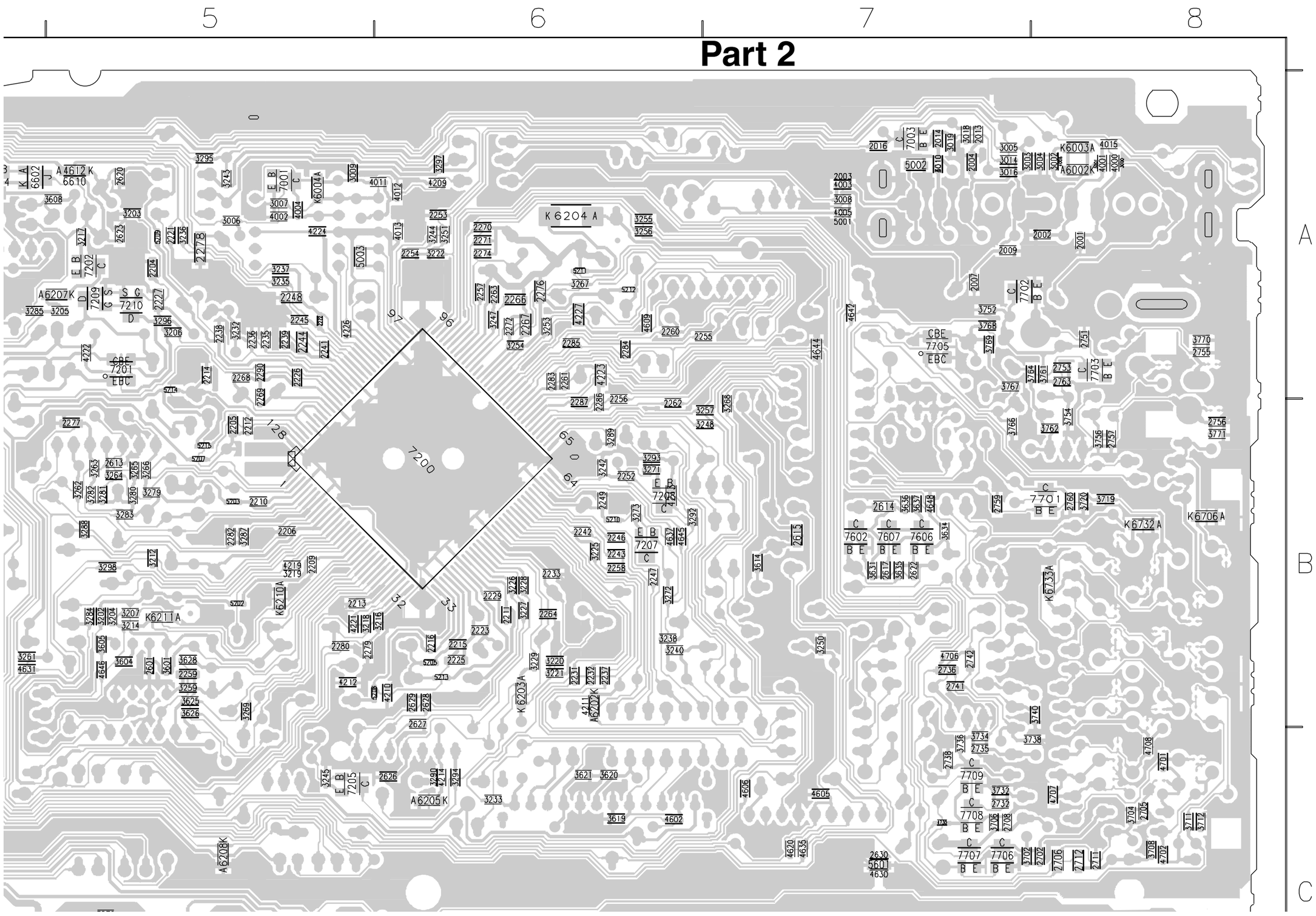


E_14480_094b.eps
130404

## Layout Mono Carrier (Part 3 Bottom Side)

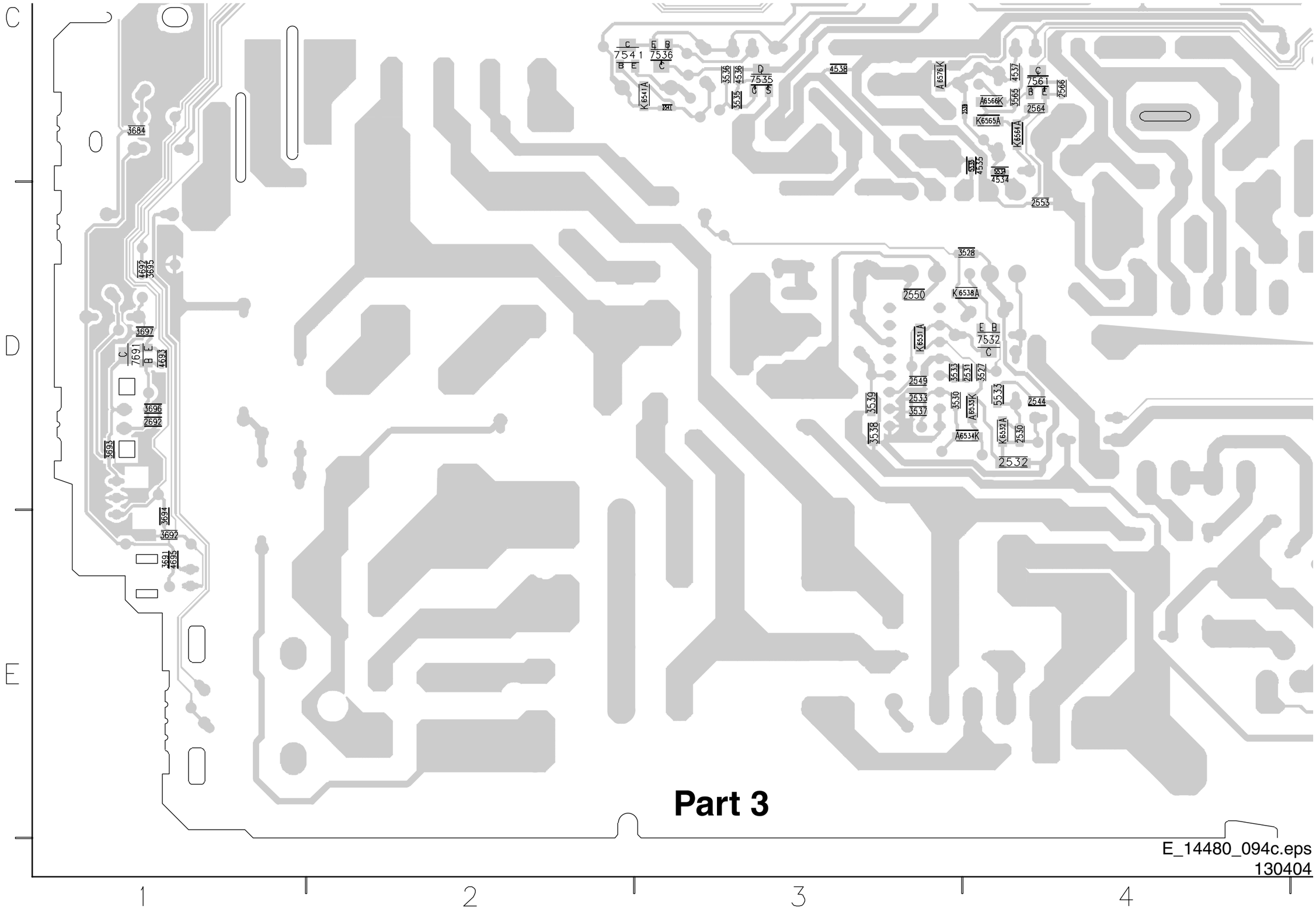


**Part 3**

E_14480_094c.eps
130404

## Layout Mono Carrier (Part 4 Bottom Side)

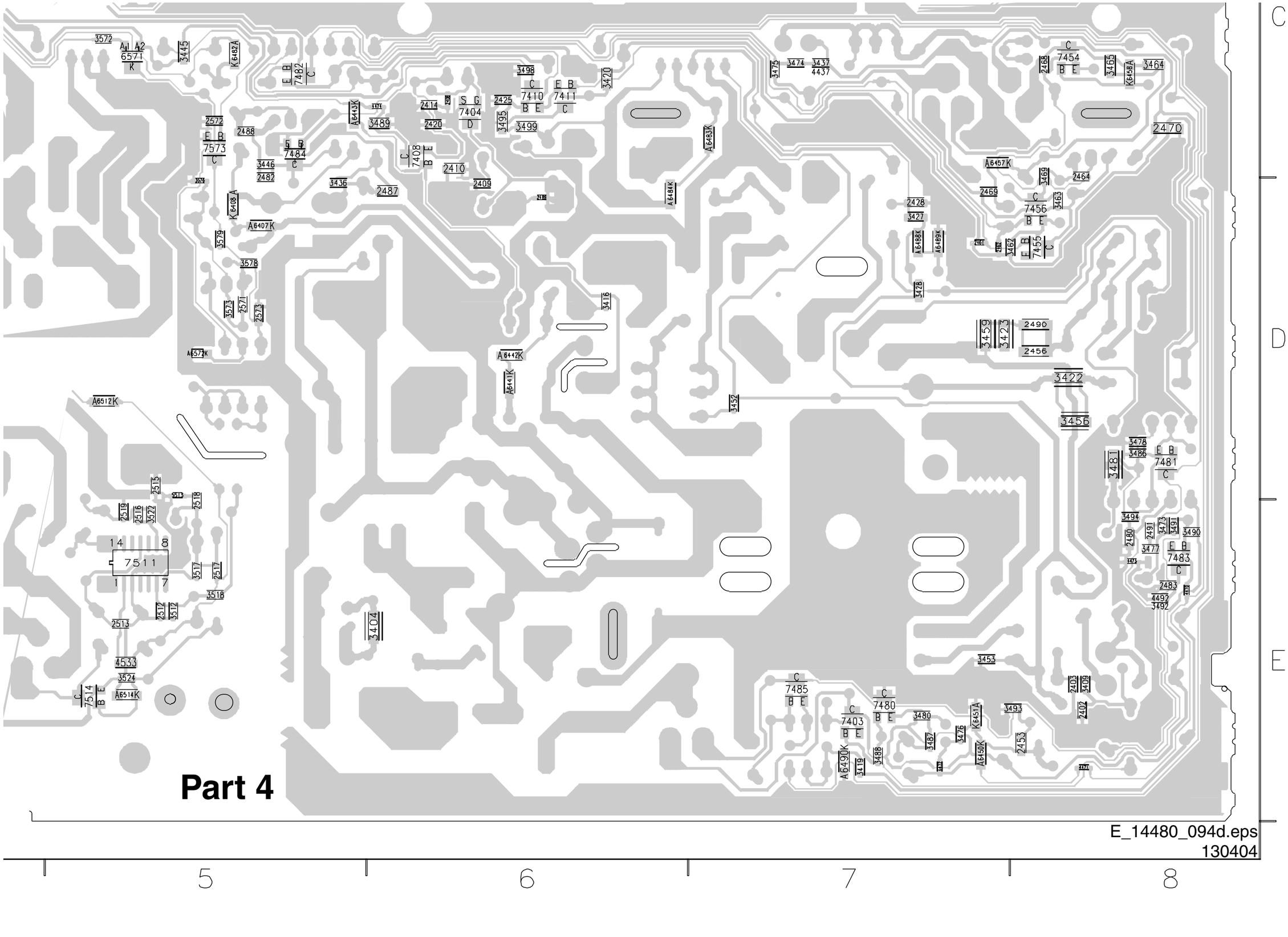

## CRT Panel

# B 1 CRT PANEL

| ITEM | EUROPE | |
|---|---|---|
| | RGB+DISPL-21RF.28WS-EU & RGB+DISPL-24WR.25.28BLD-EU | RGB+DISPL-29RF-EU & RGB+DISPL-24WR.28.32WR-EU |
| 3328 | --- | --- |
| 3329 | --- | --- |
| 3330 | --- | --- |
| 3337 | --- | --- |
| 4328 | JMP | JMP |
| 4329 | JMP | JMP |
| 4330 | JMP | JMP |
| 4337 | --- | --- |
| 5351 | --- | IND FXD LAL04 A 22U PM10 |
| 9351 | JMP | --- |

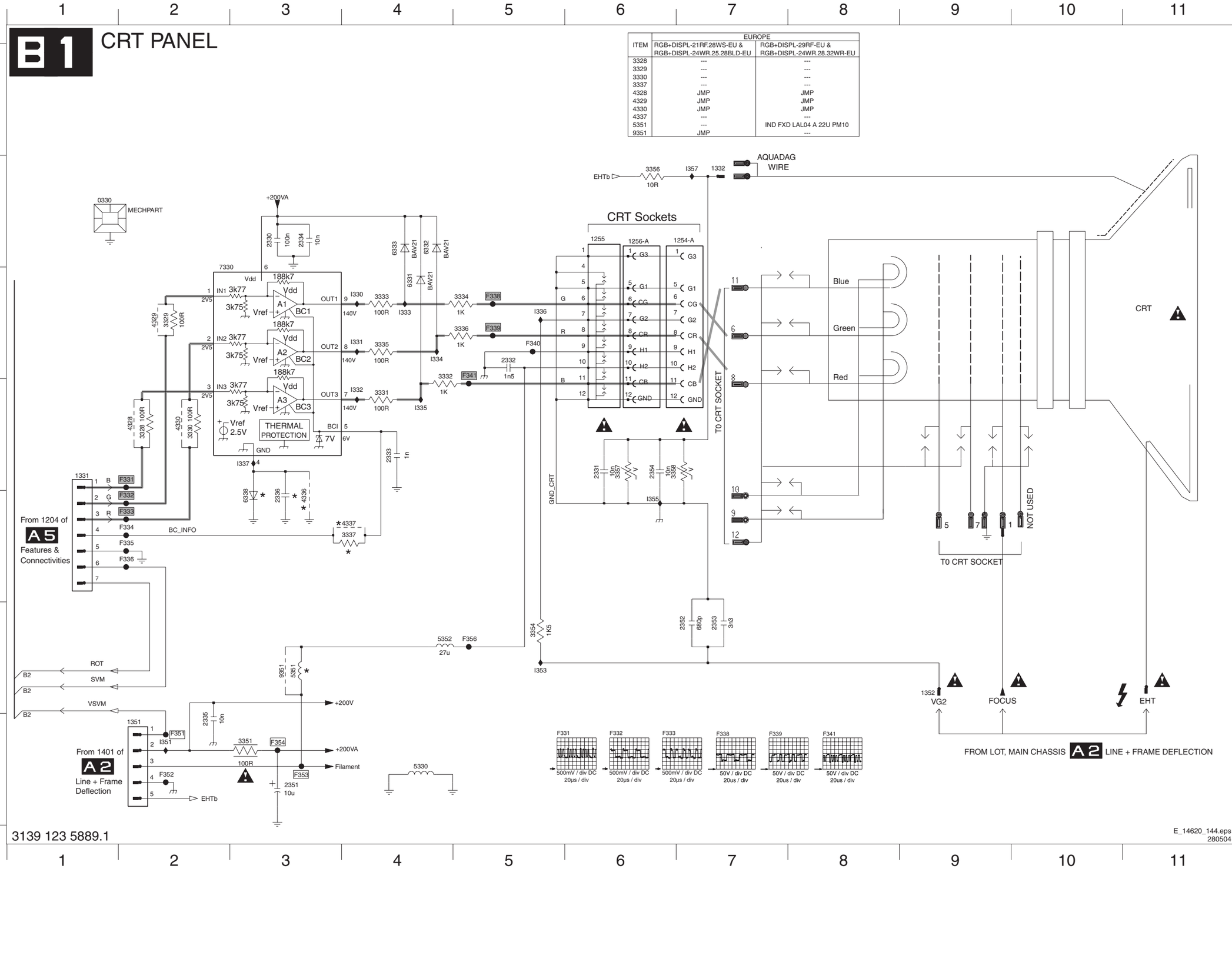


3139 123 5889.1

E_14620_144.eps
280504

0330 B1
1254-A B7
1255 B6
1256-A B6
1331 D1
1332 B7
1351 G2
1352 F9
2330 B3
2331 D6
2332 C5
2333 D4
2334 B3
2335 G2
2336 E3
2351 G3
2352 F7
2353 F7
2354 D6
3328 D2
3329 C2
3330 D2
3331 D4
3332 C4
3333 C4
3334 C5
3335 C4
3336 C5
3337 E4
3351 G3
3354 F5
3356 B6
3357 D6
3358 D6
4328 D2
4329 C2
4330 D2
4336 E3
4337 E4
5330 G4
5351 F3
5352 F4
6331 C4
6332 B4
6333 B4
6338 E3
7330 C2
9351 F3
F331 D2
F332 E2
F333 E2
F334 E2
F335 E2
F336 E2
F338 C5
F339 C5
F340 C5
F341 C5
F351 G2
F352 G2
F353 G3
F354 G3
F356 F5
I330 C4
I331 C4
I332 D4
I333 C4
I334 C4
I335 D4
I336 C5
I337 D3
I351 G2
I353 F5
I355 E6
I357 B7

## CRT Panel: Eco Scavem

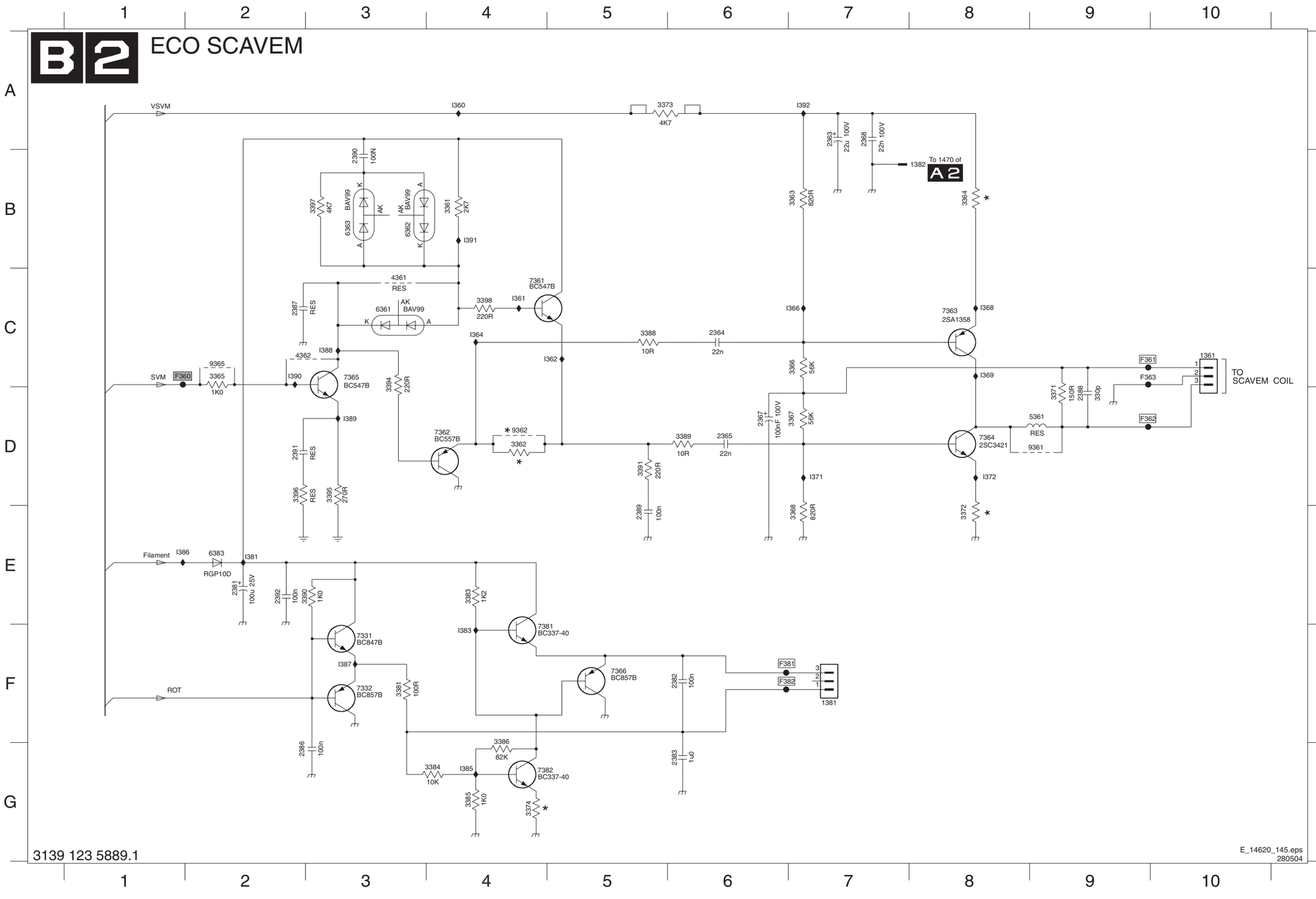


3139 123 5889.1

E_14620_145.eps
280504

1361 C10 I388 C3
1381 F7 I389 D3
1382 B8 I390 C2
2363 A7 I391 B4
2364 C6 I392 A7
2365 D6
2367 D6
2368 A7
2381 E2
2382 F6
2383 G6
2386 G2
2387 C2
2388 D9
2389 E5
2390 B3
2391 D2
2392 E2
3361 B4
3362 D4
3363 B7
3364 B8
3365 C2
3366 C7
3367 D7
3368 E7
3371 D9
3372 E8
3373 A5
3374 G4
3381 F3
3383 E4
3384 G4
3385 G4
3386 G4
3388 C5
3389 D6
3390 E3
3391 D5
3394 C3
3395 D3
3396 D2
3397 B3
3398 C4
4361 C3
4362 C2
5361 D9
6361 C3
6362 B3
6363 B3
6383 E2
7331 F3
7332 F3
7361 C4
7362 D4
7363 C8
7364 D8
7365 C3
7366 F5
7381 F4
7382 G4
9361 D9
9362 D4
9365 C2
F360 C1
F361 C9
F362 D9
F363 C9
F381 F6
F382 F6
I360 A4
I361 C4
I362 C5
I364 C4
I366 C7
I368 C8
I369 C8
I371 D7
I372 D8
I381 E2
I383 F4
I385 G4
I386 E1
I387 F3

## Layout CRT Panel (Top Side)

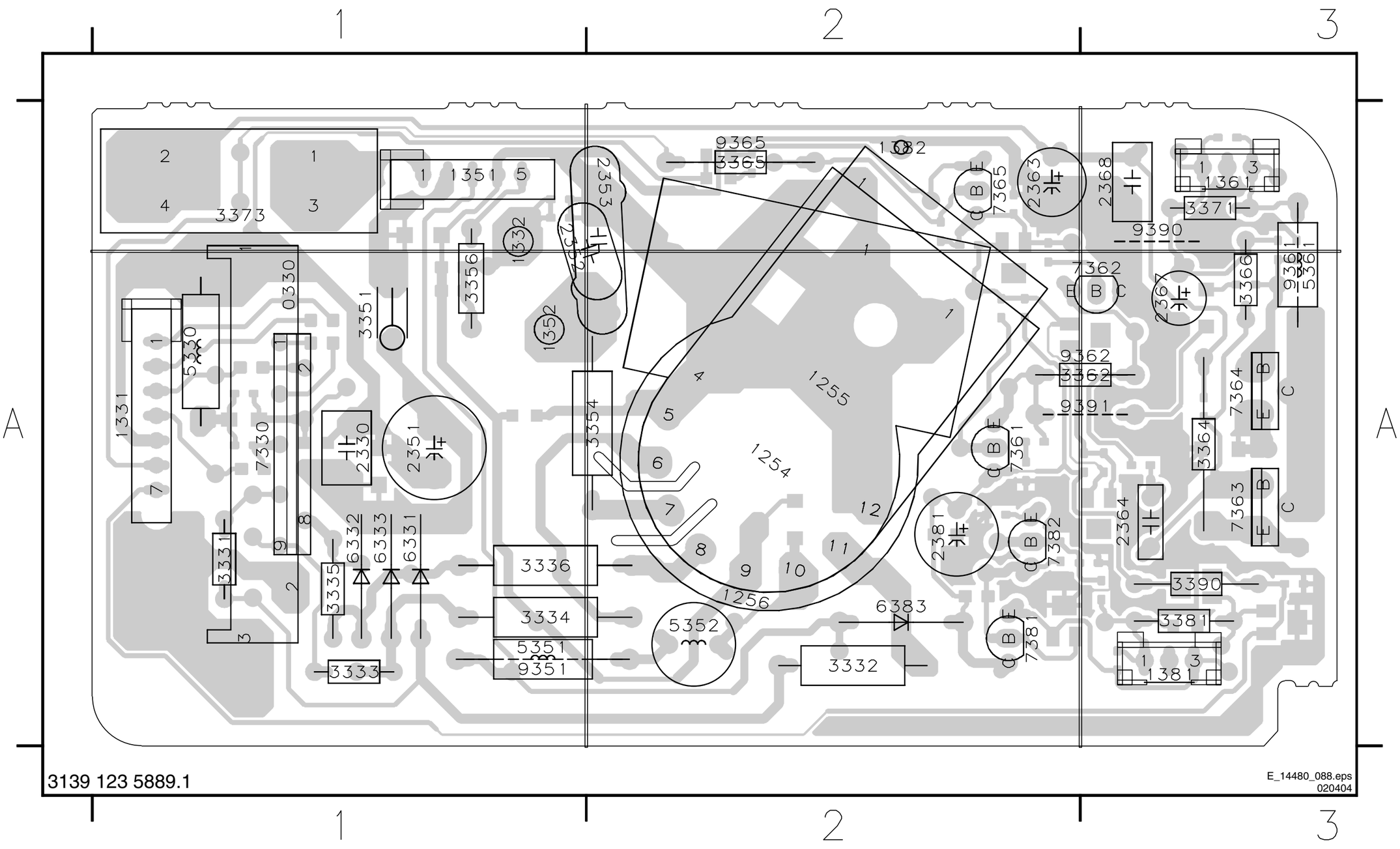


0330 A1
1254 A2
1255 A2
1256 A2
1331 A1
1332 A1
1351 A1
1352 A1
1361 A3
1381 A3
1382 A2
2330 A1
2351 A1
2352 A2
2353 A2
2363 A2
2364 A3
2367 A3
2368 A3
2381 A2
3331 A1
3332 A2
3333 A1
3334 A1
3335 A1
3336 A1
3351 A1
3354 A2
3356 A1
3362 A3
3364 A3
3365 A2
3366 A3
3371 A3
3373 A1
3381 A3
3390 A3
5330 A1
5351 A1
5352 A2
5361 A3
6331 A1
6332 A1
6333 A1
6383 A2
7330 A1
7361 A2
7362 A3
7363 A3
7364 A3
7365 A2
7381 A2
7382 A2
9351 A1
9361 A3
9362 A3
9365 A2
9390 A3
9391 A3

## Layout CRT Panel (Bottom Side)

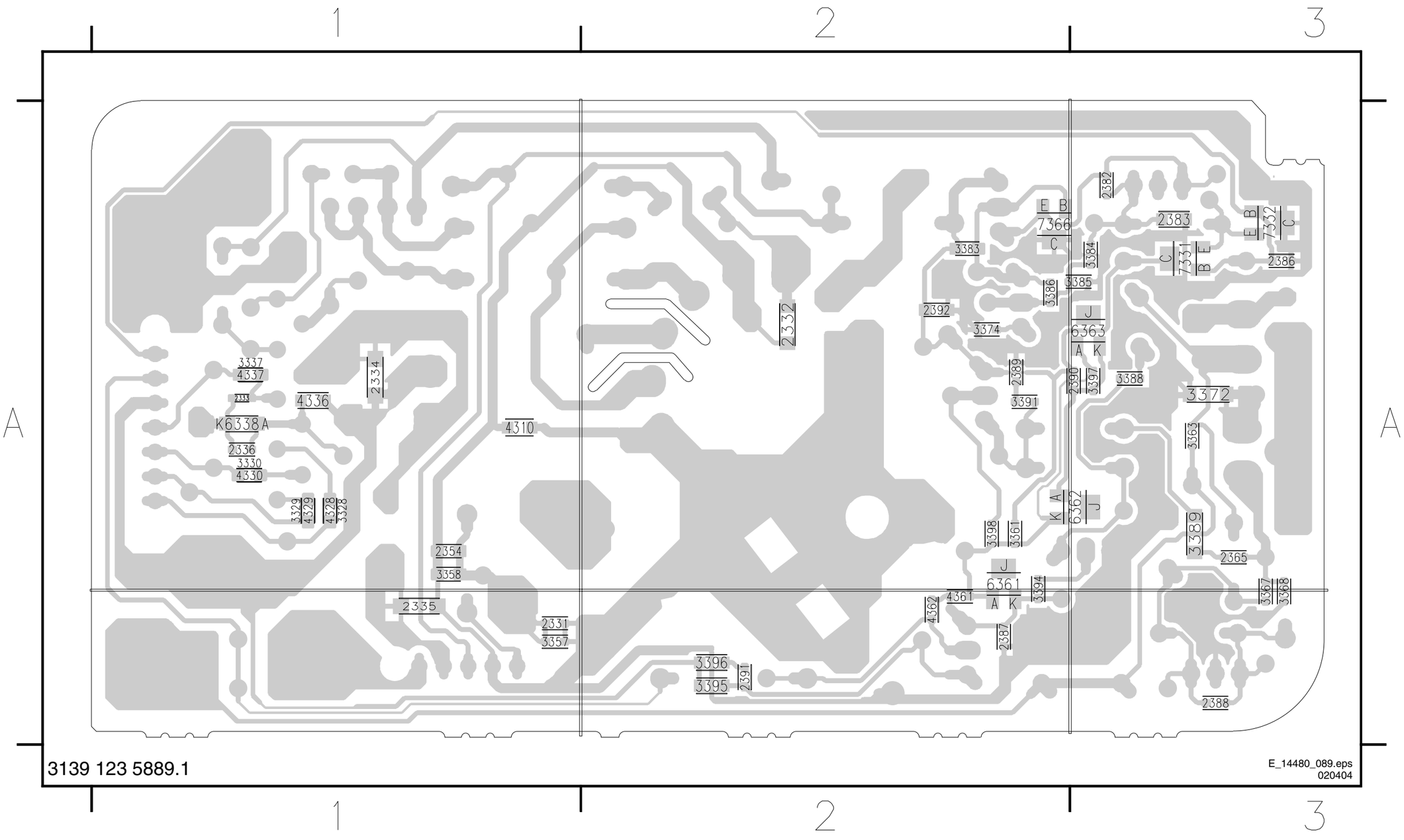


3139 123 5889.1

E_14480_089.eps
020404

| | |
|---|---|
| 2331 | A1 |
| 2332 | A2 |
| 2333 | A1 |
| 2334 | A1 |
| 2335 | A1 |
| 2336 | A1 |
| 2354 | A1 |
| 2365 | A3 |
| 2382 | A3 |
| 2383 | A3 |
| 2386 | A3 |
| 2387 | A2 |
| 2388 | A3 |
| 2389 | A2 |
| 2390 | A3 |
| 2391 | A2 |
| 2392 | A2 |
| 3328 | A1 |
| 3329 | A1 |
| 3330 | A1 |
| 3337 | A1 |
| 3357 | A1 |
| 3358 | A1 |
| 3361 | A2 |
| 3363 | A3 |
| 3367 | A3 |
| 3368 | A3 |
| 3372 | A3 |
| 3374 | A2 |
| 3383 | A2 |
| 3384 | A3 |
| 3385 | A3 |
| 3386 | A2 |
| 3388 | A3 |
| 3389 | A3 |
| 3391 | A2 |
| 3394 | A2 |
| 3395 | A2 |
| 3396 | A2 |
| 3397 | A3 |
| 3398 | A2 |
| 4310 | A1 |
| 4328 | A1 |
| 4329 | A1 |
| 4330 | A1 |
| 4336 | A1 |
| 4337 | A1 |
| 4361 | A2 |
| 4362 | A2 |
| 6338 | A1 |
| 6361 | A2 |
| 6362 | A3 |
| 6363 | A3 |
| 7331 | A3 |
| 7332 | A3 |
| 7366 | A2 |

## Side AV + Headphone Panel (PV-2)

# SIDE AV PANEL + HP PANEL

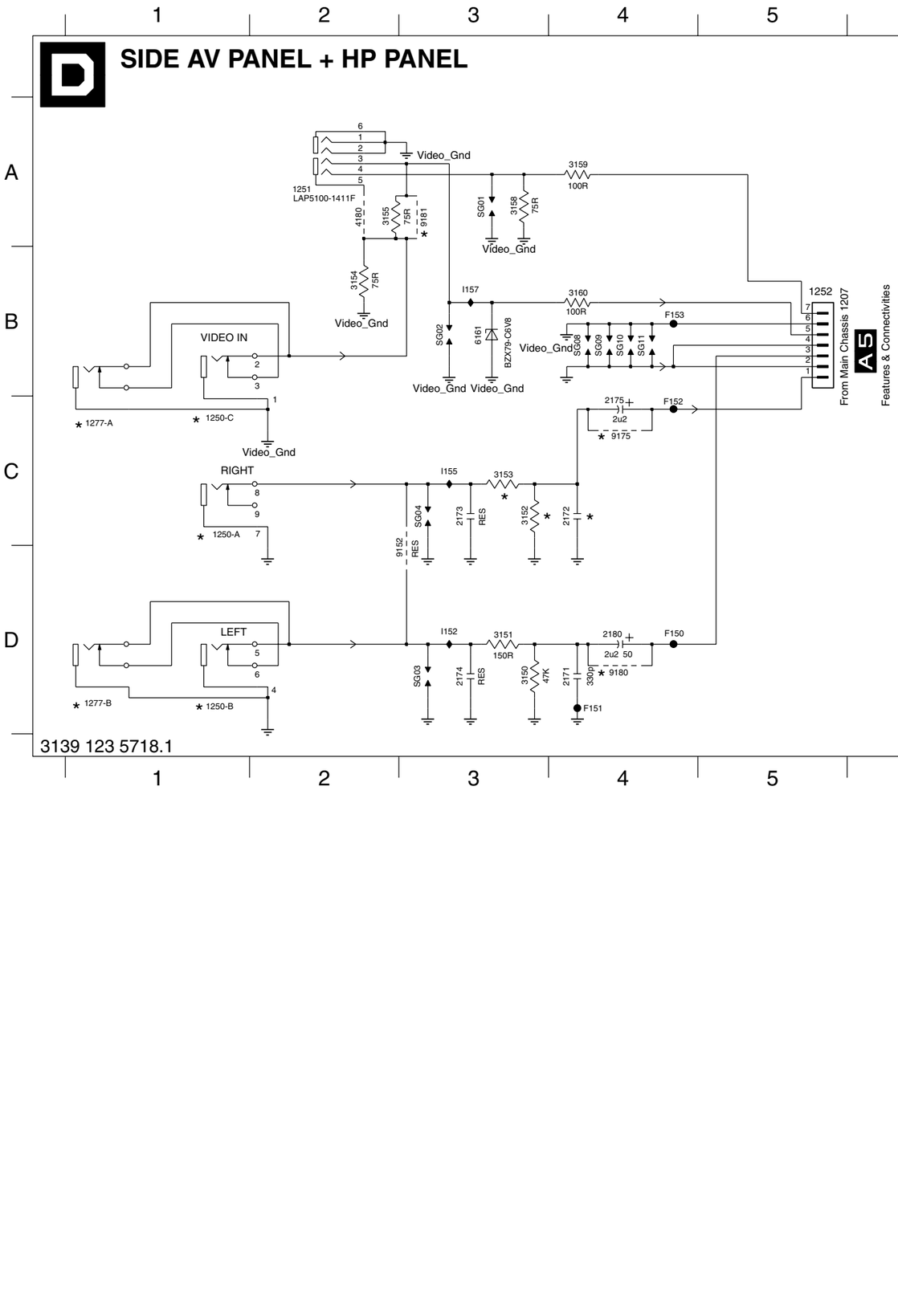


3139 123 5718.1

E_14480_037.eps
190204

1232 A9
1250-A C1
1250-B D1
1250-C C1
1251 A2
1252 B5
1254 B6
1277-A C1
1277-B D1
1278 A10
1279 B10
2171 D4
2172 C4
2173 C3
2174 D3
2175 C4
2176 B8
2178 B8
2180 D4
2181 C8
3150 D3
3151 D3
3152 C3
3153 C3
3154 B2
3155 A2
3156 B8
3157 B8
3158 A3
3159 A4
3160 B4
3161 C8
4180 A2
6161 B3
9152 D3
9175 C4
9180 D4
9181 A3
F150 D4
F151 D4
F152 C4
F153 B4
F154 B7
I152 D3
I155 C3
I157 B3
I162 B7
I163 C8
I166 B7
I168 B8
I169 C8
I170 B10
I171 B10
SG01 A3
SG02 B3
SG03 D3
SG04 C3
SG08 B4
SG09 B4
SG10 B4
SG11 B4

## Layout Side AV + Headphone Panel (PV-2) (Top Side)

| | | | | | | | | | | | | | | | |
|---|---|---|---|---|---|---|---|---|---|---|---|---|---|---|---|
| 1232 | A4 | 1254 | A3 | 2171 | A1 | 2175 | A2 | 3152 | A3 | 3156 | A4 | 3160 | A1 | 9180 | A1 |
| 1250 | A3 | 1277 | A2 | 2172 | A2 | 2180 | A1 | 3153 | A3 | 3157 | A4 | 6161 | A1 | 9181 | A1 |
| 1251 | A2 | 1278 | A4 | 2173 | A3 | 3150 | A2 | 3154 | A1 | 3158 | A1 | 9152 | A3 | | |
| 1252 | A1 | 1279 | A4 | 2174 | A2 | 3151 | A2 | 3155 | A1 | 3159 | A1 | 9175 | A2 | | |

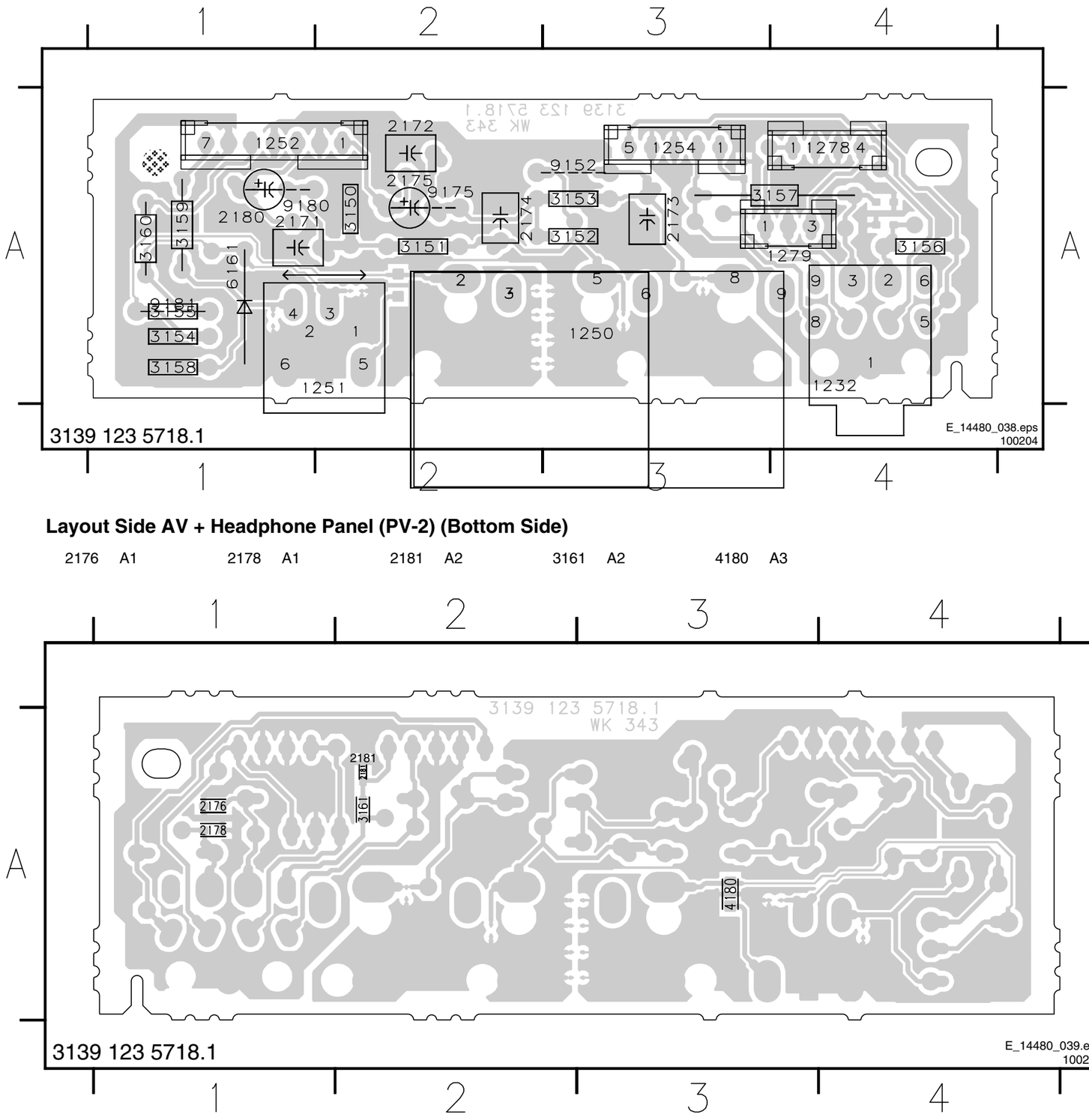


## Layout Side AV + Headphone Panel (PV-2) (Bottom Side)

| | | | | | | | | | |
|---|---|---|---|---|---|---|---|---|---|
| 2176 | A1 | 2178 | A1 | 2181 | A2 | 3161 | A2 | 4180 | A3 |

## Side AV + Headphone Panel (FL-13)

# SIDE AV PANEL + HP PANEL (FL13)

1251
YKF51-5304

Video_Gnd
SG01
3158 75R
3159 100R
4180
3154 75R
I157
3160 100R
F153
SG02
6161
BZX79-C6V8
SG08 SG09 SG10 SG11
1252
from Main Chassis 1207
A5
Features & Connectivities
VIDEO IN
* 1277-A
* 1250-C
2175 2u2
F152
9175 RES
RIGHT
I155
3153 22K
SG04
2173 330p
3152 47K
2172 330p
9152 RES
* 1250-A
LEFT
I152
3151 22K
2180 2u2 50
F150
SG03
2174 330p
3150 47K
2171 330p
9180 RES
F151
* 1277-B
* 1250-B

A7
A6
for 2X5W from 1280
for 2X10W from 1902
from Main Chassis
1254
I166
F154
3156 820R
I168
2178 470p
2176 100n
I162
3157 820R
I163
I169
3161 39K
2181 1u
HEADPHONE
1232
I170
I171
1278
TO SPEAKER
1279
TO ECO SUB

1280
To Main Chassis 1682
A4
1281
From 1010 of E
Top Control (FL13)

3139 123 5823.1
E_14480_132.eps
180504

1232 B9
1250-A D1
1250-B E1
1250-C C1
1251 A1
1252 C5
1254 B6
1277-A C1
1277-B E1
1278 B10
1279 B10
1280 D10
1281 E10
2171 E4
2172 D4
2173 D3
2174 E3
2175 C4
2176 C8
2178 B8
2180 E4
2181 D8
3150 E3
3151 E3
3152 D3
3153 D3
3154 B2
3156 B8
3157 C8
3158 A3
3159 A4
3160 C4
3161 C8
4180 B2
6161 C3
9152 D2
9175 C4
9180 E4
F150 E4
F151 E4
F152 C4
F153 C4
F154 B7
I152 E3
I155 D3
I157 B3
I162 C7
I163 C8
I166 B7
I168 B8
I169 C8
I170 B10
I171 C10
SG01 A3
SG02 C3
SG03 E3
SG04 D3
SG08 C4
SG09 C4
SG10 C4
SG11 C4

## Layout Side AV + Headphone Panel (FL-13) (Top Side)

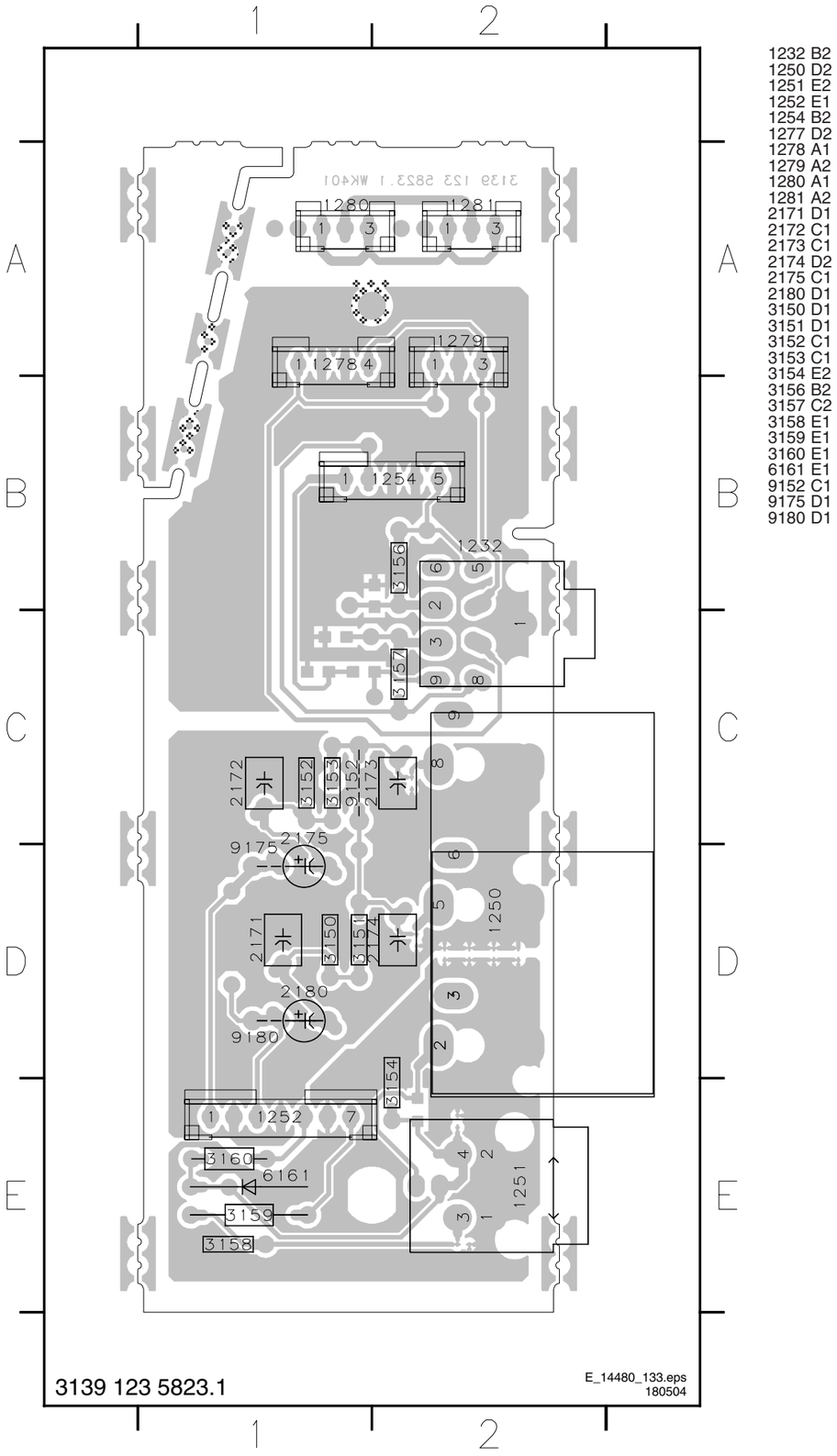


## Layout Side AV + Headphone Panel (FL-13) (Bottom Side)

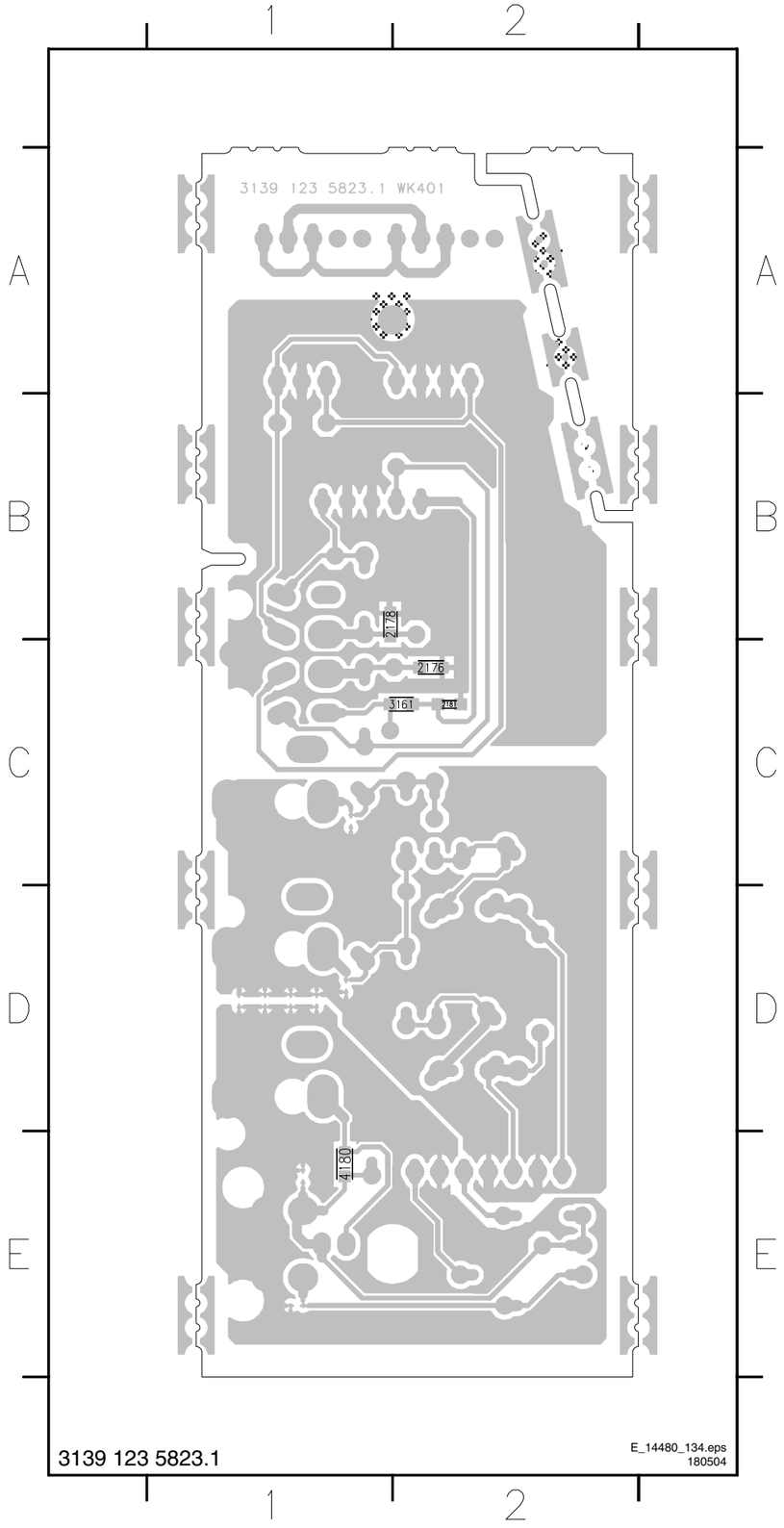

## Top Control Panel (PV2)

1010 A1 1012 B3 1014 B2 3011 A2 3013 A3 3015 A3 F011 A2 I011 A2 I017 B3
1011 B3 1013 B2 3010 A2 3012 A2 3014 B3 3016 B3 F012 A3 I013 A3 I018 A3

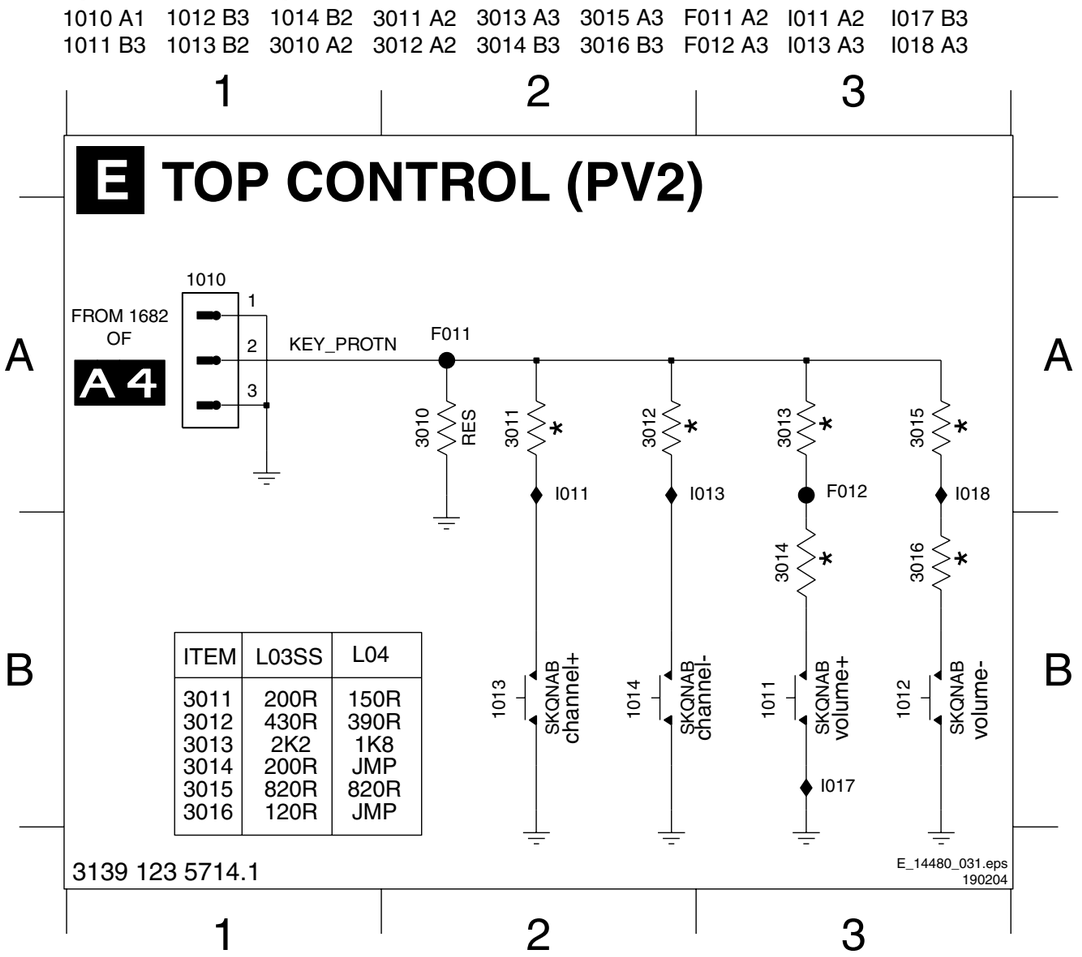


## Layout Top Control Panel (PV2) (Top Side)

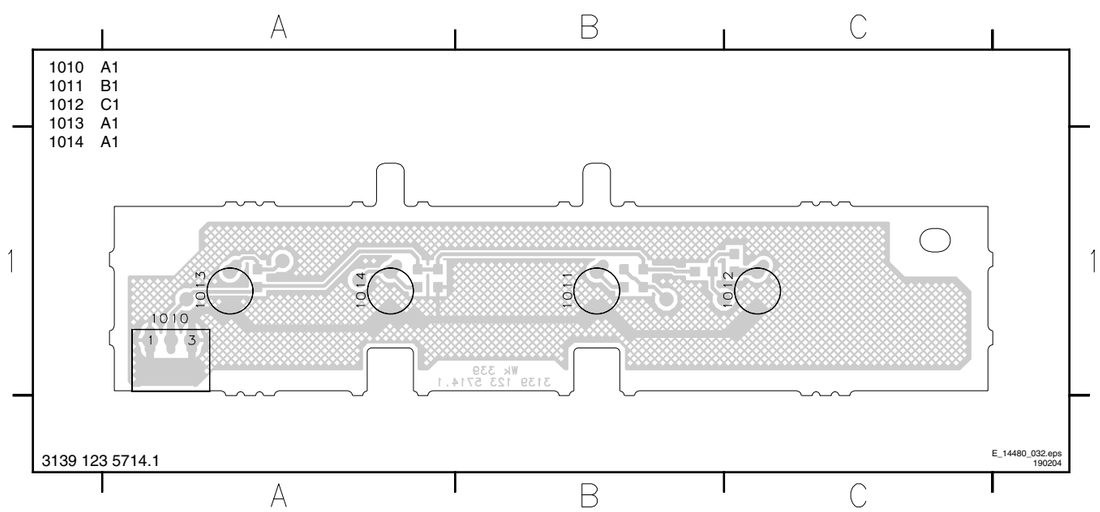


## Layout Top Control Panel (PV2) (Bottom Side)

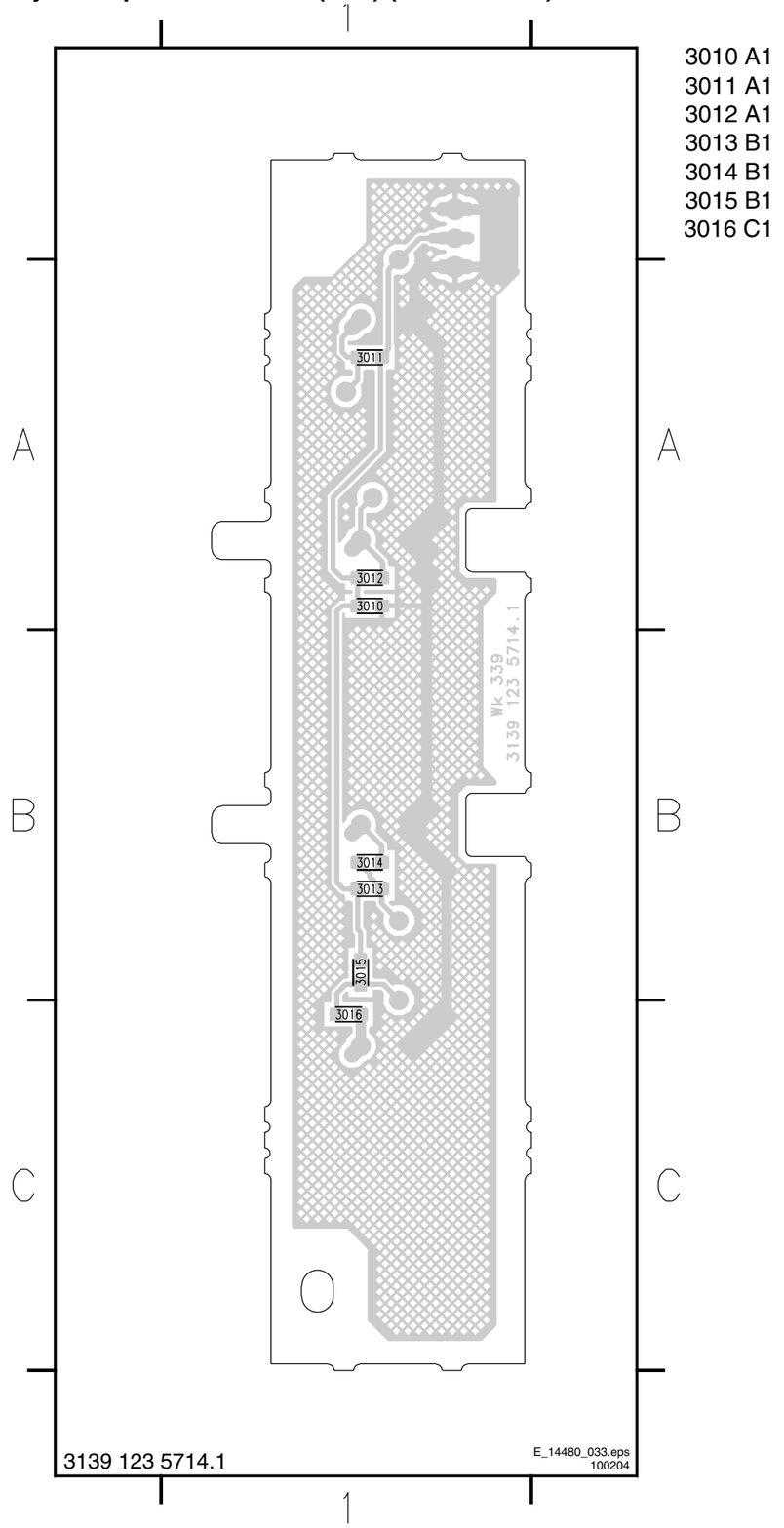

## Top Control Panel (FL-13)

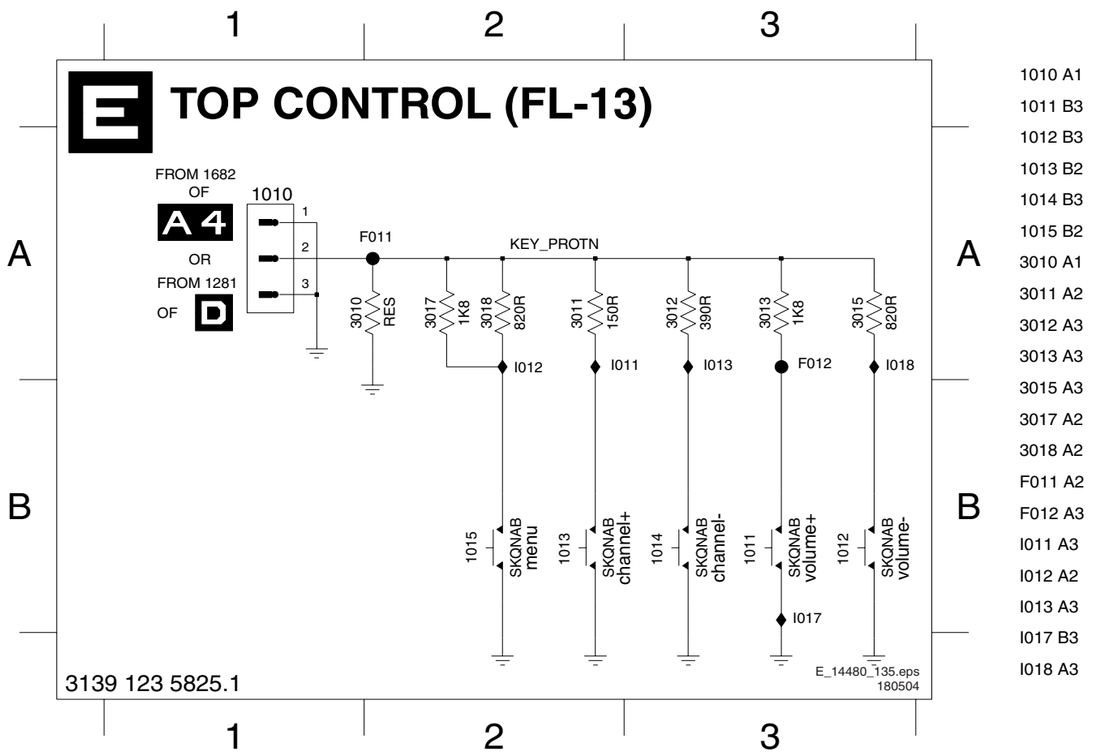


1010 A1
1011 B3
1012 B3
1013 B2
1014 B3
1015 B2
3010 A1
3011 A2
3012 A3
3013 A3
3015 A3
3017 A2
3018 A2
F011 A2
F012 A3
I011 A3
I012 A2
I013 A3
I017 B3
I018 A3

## Layout Top Control Panel (FL-13)

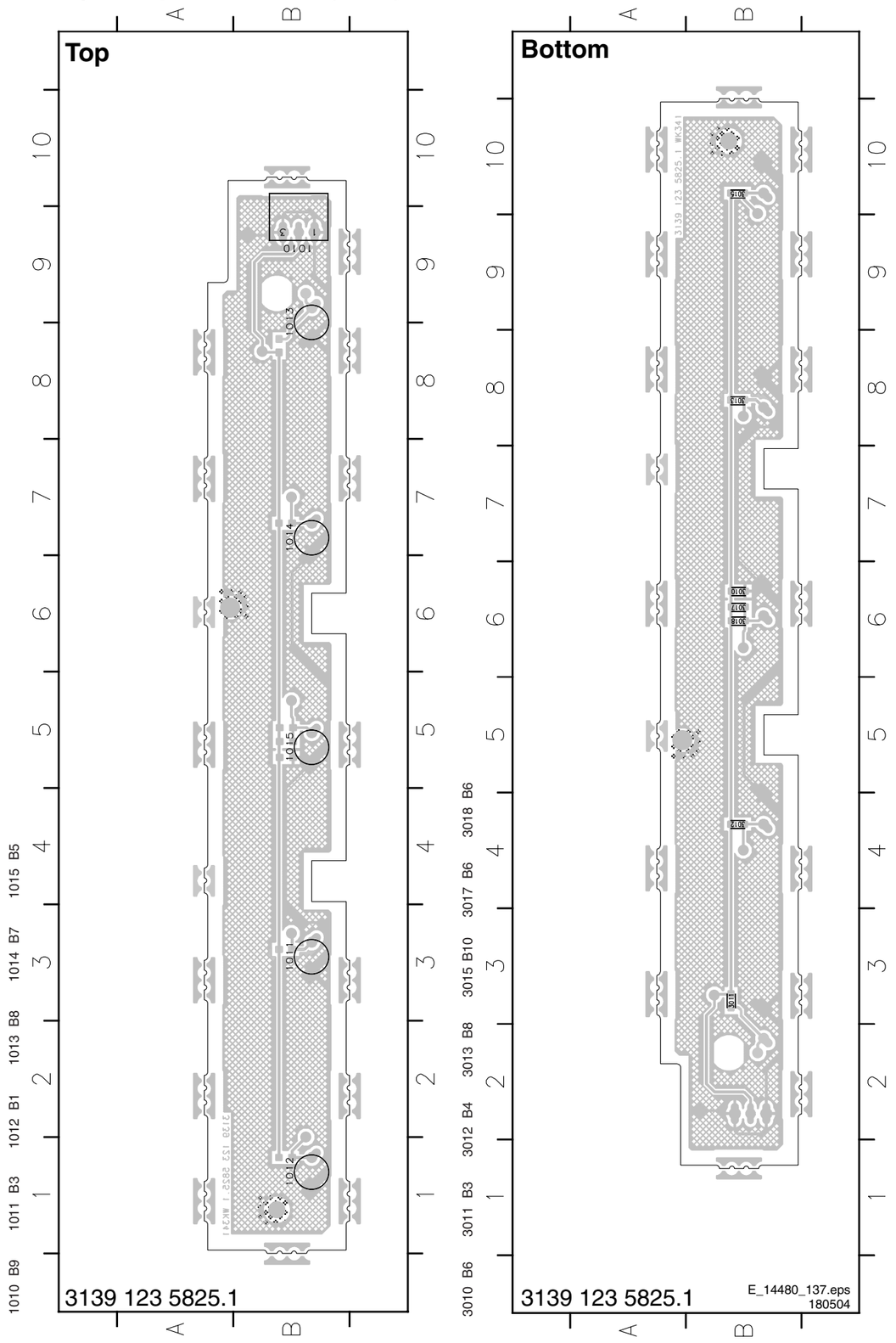

## Power Supply PIP Panel

F 1 POWER SUPPLY PIP

| ITEM | PIP-EU | PIP-RD+DVD-EU | PIP-AP | PIP+DVD-AP |
|---|---|---|---|---|
| 1206 | --- | CON BM V 4P M 2.50 | --- | CON BM V 4P M 2.50 |
| 1220 | --- | CON BM V 5P M 2.5 | --- | CON BM V 5P M 2.5 |
| 2007 | --- | CER2 0603 X7R 16V 100N | --- | CER2 0603 X7R 16V 100N |
| 2242 | --- | CER2 0603 X7R 10V 220N | --- | CER2 0603 X7R 10V 220N |
| 2262 | --- | CER2 0603 X7R 16V 100N | --- | CER2 0603 X7R 16V 100N |
| 2263 | --- | CER2 0603 X7R 10V 2U2 | --- | CER2 0603 X7R 10V 2U2 |
| 2280 | --- | CER2 0603 X7R 16V 100N | --- | CER2 0603 X7R 16V 100N |
| 3010 | --- | RST SM 0603 75R PM5 | --- | RST SM 0603 75R PM5 |
| 3252 | --- | --- | --- | --- |
| 3253 | --- | RST SM 0603 75R PM5 | --- | RST SM 0603 75R PM5 |
| 3254 | --- | RST SM 0603 75R PM5 | --- | RST SM 0603 75R PM5 |
| 3255 | --- | RST SM 0603 2K2 PM5 | --- | RST SM 0603 2K2 PM5 |
| 3282 | --- | RST CRB 1/6W A 2K2 PM5 | --- | RST CRB 1/6W A 2K2 PM5 |
| 3283 | --- | RST SM 0603 15K PM5 | --- | RST SM 0603 15K PM5 |
| 3284 | --- | RST SM 0603 5K6 PM5 | --- | RST SM 0603 5K6 PM5 |
| 3285 | --- | RST SM 0603 75R PM5 | --- | RST SM 0603 75R PM5 |
| 3286 | --- | RST SM 0603 390R PM5 | --- | RST SM 0603 390R PM5 |
| 5245 | --- | RST SM 0603 75R PM5 | --- | RST SM 0603 75R PM5 |
| 7243 | --- | FXDIND SM 0805 5U6 PM10 | --- | FXDIND SM 0805 5U6 PM10 |


1206 D4 4271 F4
1212 E1 4272 G3
1214 D4 4273 G4
1219 E4 4274 E6
1220 B11 4275 E4
1241 E8 4276 F5
2007 B10 4278 F5
2241 D6 4279 G5
2242 D7 5241 B7
2243 B7 5242 B7
2244 B7 5243 B10
A 2245 B8 5244 D6
2246 B8 5245 B6
2247 B9 5271 D2
2248 B9 5501 B1
2249 B10 5502 A4
2250 B10 5503 A4
2251 C7 5504 B5
2252 C7 5505 B5
2253 C7 5506 B3
2254 C7 5507 A4
2255 E7 6501 B3
2256 E7 6502 A5
2257 E8 6503 A5
2258 E8 6504 B5
B 2259 E10 7241 E7
2261 E6 7242 C8
2262 B10 7243 C6
2263 C10 7271 E3
2264 D5 7272 F4
2265 E5 7273 G3
2271 E2 7274 G4
2272 E2 7501 A2
2273 E5 7502 A4
2274 E4 F240 D6
2275 F5 F241 E6
C 2276 F3 F242 C5
2277 G5 F243 F6
2278 G4 F244 F6
2279 C6 F245 C5
2280 C6 F271 E2
2501 B1 F272 F2
2502 B1 F273 F2
2503 C2 F274 F2
2504 B3 F275 F1
2505 A4 F276 B11
2506 A5 F279 B11
2507 B5 F501 C1
2508 B5 F502 A1
D 2509 C5 F503 D6
2510 C5 F504 D6
2511 A5 F505 A5
2512 B4 F506 B5
3010 B11 F507 B5
3241 D6 F508 B5
3243 D6 I241 B7
3244 D7 I242 B8
3245 E6 I243 B9
3246 E7 I244 B7
3247 E7 I245 C7
E 3248 E7 I248 D7
3249 E9 I249 D7
3250 E9 I250 D7
3251 E6 I251 D7
3252 C10 I252 E7
3253 C10 I253 E7
3254 D11 I254 E9
3255 C11 I255 E9
3271 E3 I256 B6
3272 E3 I257 C7
3273 F4 I258 C6
F 3274 E4 I259 C6
3275 G3 I263 C10
3276 F3 I271 D2
3277 G4 I273 E4
3278 G3 I274 E5
3279 G5 I276 F4
3280 E3 I277 F5
3281 F4 I278 G4
3282 C6 I279 F3
3283 C6 I280 F5
3284 C6 I281 G5
3285 C6 I501 B1
3286 C7 I502 A1
3287 B6 I503 B1
3500 B1 I504 B3
G 3501 B1 I505 A3
3502 B1 I506 A4
3503 B1 I507 C4
3504 B2 I508 A5
3505 A3 I509 A5
3506 A4 I510 A3
3507 B1
4270 E3




3139 123 5821.1

E_14480_107.eps 150404

## Tuner IF and Demodulator PIP Panel

**F 2** TUNER IF & DEMODULATOR PIP

TUNER / IF

DEMODULATOR

| ITEM | PIP-EU | PIP-RD+DVD-EU | PIP-AP | PIP+DVD-AP |
|---|---|---|---|---|
| 1000 | TUNER UV1316E/A I-4 | TUNER UV1316T/A I X-3 | TUNER UV1316T/A I-4 | TUNER UV1316T/A I-4 |
| 1003 | FIL SAW 38MHZ9 OFWK3953 | FIL SAW 38MHZ9 OFWK3953 | FIL SAW 38MHZ9 OFWK7257 | FIL SAW 38MHZ9 OFWK7257 |
| 2005 | --- | --- | CER2 0603 X7R 50V 10N | CER2 0603 X7R 50V 10N |
| 3004 | RST SM 0603 10K PM5 | RST SM 0603 10K PM5 | --- | --- |
| 3007 | --- | --- | RST SM 0603 6K8 PM5 | RST SM 0603 6K8 PM5 |
| 3008 | --- | --- | RST SM 0603 2K2 PM5 | RST SM 0603 2K2 PM5 |
| 3009 | --- | --- | RST SM 0603 2K2 PM5 | RST SM 0603 2K2 PM5 |
| 3203 | --- | --- | RST CRB 1/6W A 4K7 PM5 | RST CRB 1/6W A 4K7 PM5 |
| 4001 | --- | --- | RST SM 0603 JUMP 0R05 | RST SM 0603 JUMP 0R05 |
| 4002 | RST SM 0603 JUMP OR05 | RST SM 0603 JUMP 0R05 | --- | --- |
| 4004 | --- | --- | RST SM 0603 JUMP 0R05 | RST SM 0603 JUMP 0R05 |
| 6001 | DIO SIG SM 1SS356 (RH) | DIO SIG SM 1SS356 (RH) | --- | --- |
| 6002 | --- | --- | DIO SIG SM 1SS356 (RH) | DIO SIG SM 1SS356 (RH) |
| 7001 | --- | --- | TRA SIG SM PDTC124ET (C) | TRA SIG SM PDTC124ET (C) |


1000 D3
1002 D5
1003 D5
1004 D3
1201 C7
2001 C1
2002 C2
2003 C2
2004 C3
2005 D4
2006 D4
2010 B4
2011 B4
2201 E7
2202 C7
2203 C7
2204 C7
2205 C8
2206 C8
2207 C8
2208 C9
2209 F7
2210 F8
2211 F8
2220 B7
2221 B7
3001 C2
3002 C2
3003 B3
3004 C3
3005 E2
3006 E2
3007 D4
3008 D4
3009 E4
3201 E7
3202 E6
3203 E6
3204 C7
3205 D7
3206 C8
3207 C8
3208 D9
3210 D9
3211 D9
3212 F9
3215 F7
3216 D10
4001 E5
4002 E5
4004 C3
4208 D9
5001 C2
5002 E3
5010 A4
5220 A7
6001 C3
6002 D4
7001 E5
7201 E8
7202 C9
F001 C3
F002 D4
F003 E4
F201 E6
F202 E7
I001 C2
I002 C2
I003 C2
I004 A4
I005 D5
I006 E4
I007 E2
I201 E6
I202 C7
I203 C7
I204 D7
I205 C8
I206 C8
I207 D9
I208 D8
I209 D9
I210 F7
I213 F7
I217 A7




E_14480_108.eps
280504

## Layout PIP Panel (Top Side)

| | | | | | | | | | | | | | | | | | | | | | | | | | |
|---|---|---|---|---|---|---|---|---|---|---|---|---|---|---|---|---|---|---|---|---|---|---|---|---|---|
| 1000 | D2 | 1206 | A1 | 1241 | C4 | 2245 | B4 | 2271 | B5 | 2509 | C6 | 3006 | D2 | 3208 | B2 | 3247 | C3 | 5001 | D3 | 5243 | D4 | 5503 | C6 | 6504 | C6 | 9283 | B1 | 9288 | C1 |
| 1002 | C2 | 1212 | A5 | 2004 | C1 | 2248 | D4 | 2501 | B6 | 2510 | D5 | 3201 | B1 | 3210 | B3 | 3249 | B4 | 5010 | D2 | 5244 | B3 | 5504 | D6 | 7502 | B5 | 9284 | C4 | 9289 | B5 |
| 1003 | C2 | 1214 | B1 | 2011 | D2 | 2250 | C4 | 2506 | C5 | 3001 | C1 | 3203 | B2 | 3215 | C1 | 3250 | B3 | 5220 | B3 | 5271 | D5 | 5505 | C5 | 9280 | D5 | 9285 | B4 | 9290 | D3 |
| 1004 | D1 | 1219 | A3 | 2221 | B2 | 2251 | D3 | 2507 | D6 | 3002 | C1 | 3206 | B1 | 3243 | B3 | 3255 | B4 | 5241 | D4 | 5501 | A6 | 6501 | C6 | 9281 | C3 | 9286 | C3 | 9550 | B6 |
| 1201 | A1 | 1220 | B4 | 2243 | D4 | 2253 | D4 | 2508 | D5 | 3003 | C1 | 3207 | B1 | 3244 | B3 | 3505 | B5 | 5242 | B4 | 5502 | C5 | 6503 | D5 | 9282 | B3 | 9287 | C1 | | |

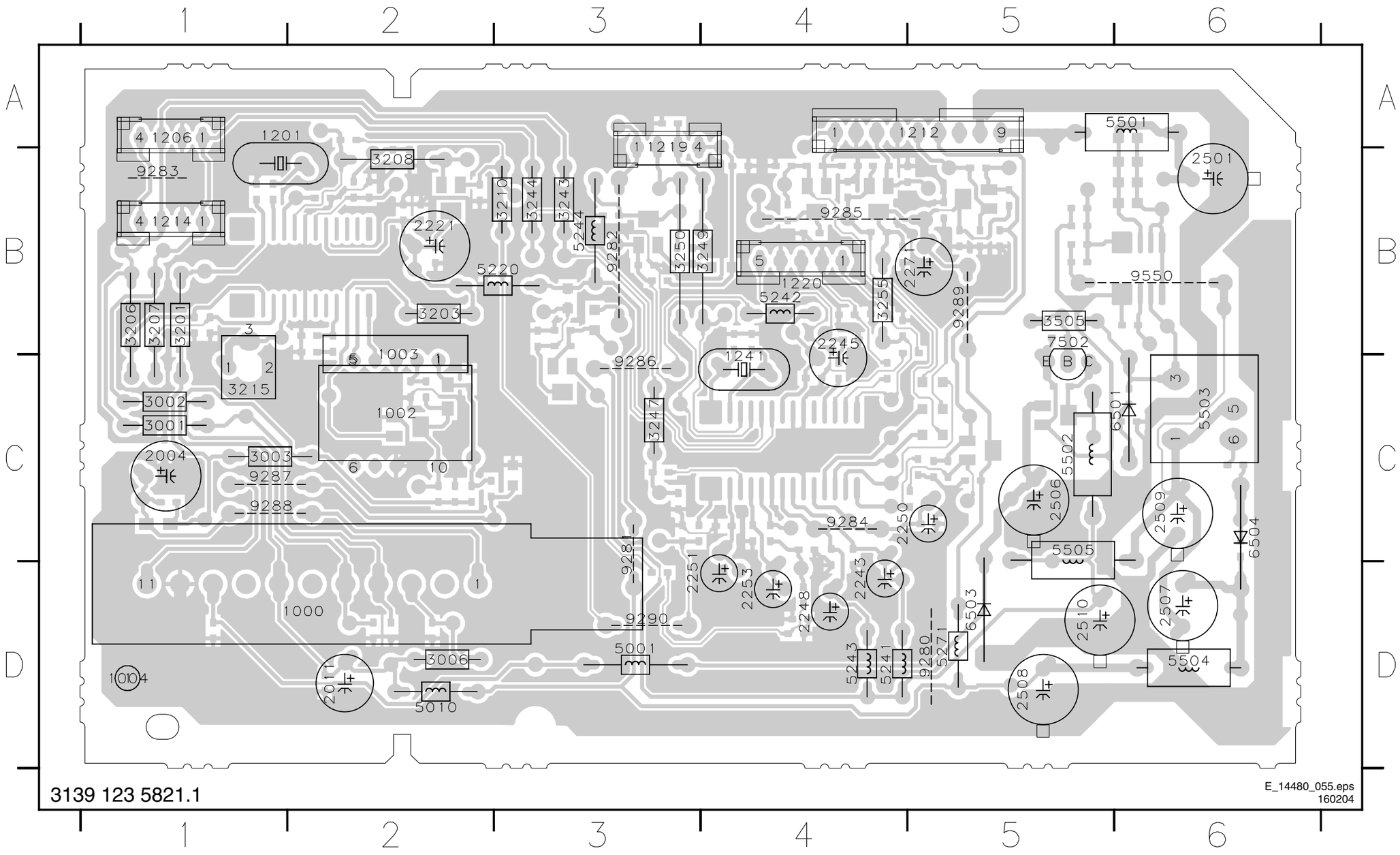


3139 123 5821.1

E_14480_055.eps
160204

## Layout PIP Panel (Bottom Side)

| | | | | | | | | | | | | | | | | | | | | | | | | | | | | | |
|---|---|---|---|---|---|---|---|---|---|---|---|---|---|---|---|---|---|---|---|---|---|---|---|---|---|---|---|---|---|
| 2001 | D5 | 2201 | B6 | 2208 | B5 | 2244 | C3 | 2256 | C4 | 2264 | A4 | 2277 | C2 | 2505 | C2 | 3009 | C5 | 3216 | B4 | 3253 | B3 | 3276 | B2 | 3283 | B4 | 3502 | B1 | 4004 | C6 | 4271 | B3 | 4279 | C2 | 6502 | C2 | 7271 | B3 |
| 2002 | D5 | 2202 | B5 | 2209 | B5 | 2246 | C3 | 2257 | B3 | 2265 | B3 | 2278 | C2 | 2511 | C1 | 3010 | B3 | 3241 | C4 | 3254 | B3 | 3277 | C2 | 3284 | D3 | 3503 | B2 | 4050 | C6 | 4272 | B2 | 5002 | C4 | 7001 | C5 | 7272 | B3 |
| 2003 | D6 | 2203 | B5 | 2210 | B5 | 2247 | C3 | 2258 | B3 | 2272 | B3 | 2279 | B4 | 2512 | C1 | 3202 | B6 | 3245 | B4 | 3271 | B3 | 3278 | B2 | 3285 | D3 | 3504 | B2 | 4208 | A5 | 4273 | C2 | 5245 | B4 | 7201 | B5 | 7273 | B2 |
| 2005 | C5 | 2204 | B6 | 2211 | B5 | 2249 | C2 | 2259 | C2 | 2273 | C2 | 2280 | B4 | 3004 | C6 | 3204 | B5 | 3246 | B4 | 3272 | B3 | 3279 | C2 | 3286 | C3 | 3506 | B2 | 4250 | D3 | 4274 | B4 | 5506 | C1 | 7202 | B5 | 7274 | C2 |
| 2006 | C5 | 2205 | B5 | 2220 | B5 | 2252 | C3 | 2261 | B3 | 2274 | B3 | 2502 | B2 | 3005 | D5 | 3205 | B5 | 3248 | C4 | 3273 | B2 | 3280 | B3 | 3287 | B4 | 3507 | B1 | 4251 | B2 | 4275 | C2 | 5507 | C1 | 7241 | B4 | 7501 | B1 |
| 2007 | C3 | 2206 | B6 | 2241 | C4 | 2254 | C3 | 2262 | B2 | 2275 | C2 | 2503 | B2 | 3007 | C5 | 3211 | B5 | 3251 | B4 | 3274 | B3 | 3281 | B3 | 3500 | A1 | 4001 | C5 | 4252 | D4 | 4276 | C2 | 6001 | C6 | 7242 | C3 | | |
| 2010 | D5 | 2207 | B6 | 2242 | C3 | 2255 | B4 | 2263 | C3 | 2276 | B2 | 2504 | B1 | 3008 | C5 | 3212 | B5 | 3252 | B3 | 3275 | B2 | 3282 | B4 | 3501 | B1 | 4002 | C5 | 4270 | B3 | 4278 | C2 | 6002 | C5 | 7243 | C4 | | |

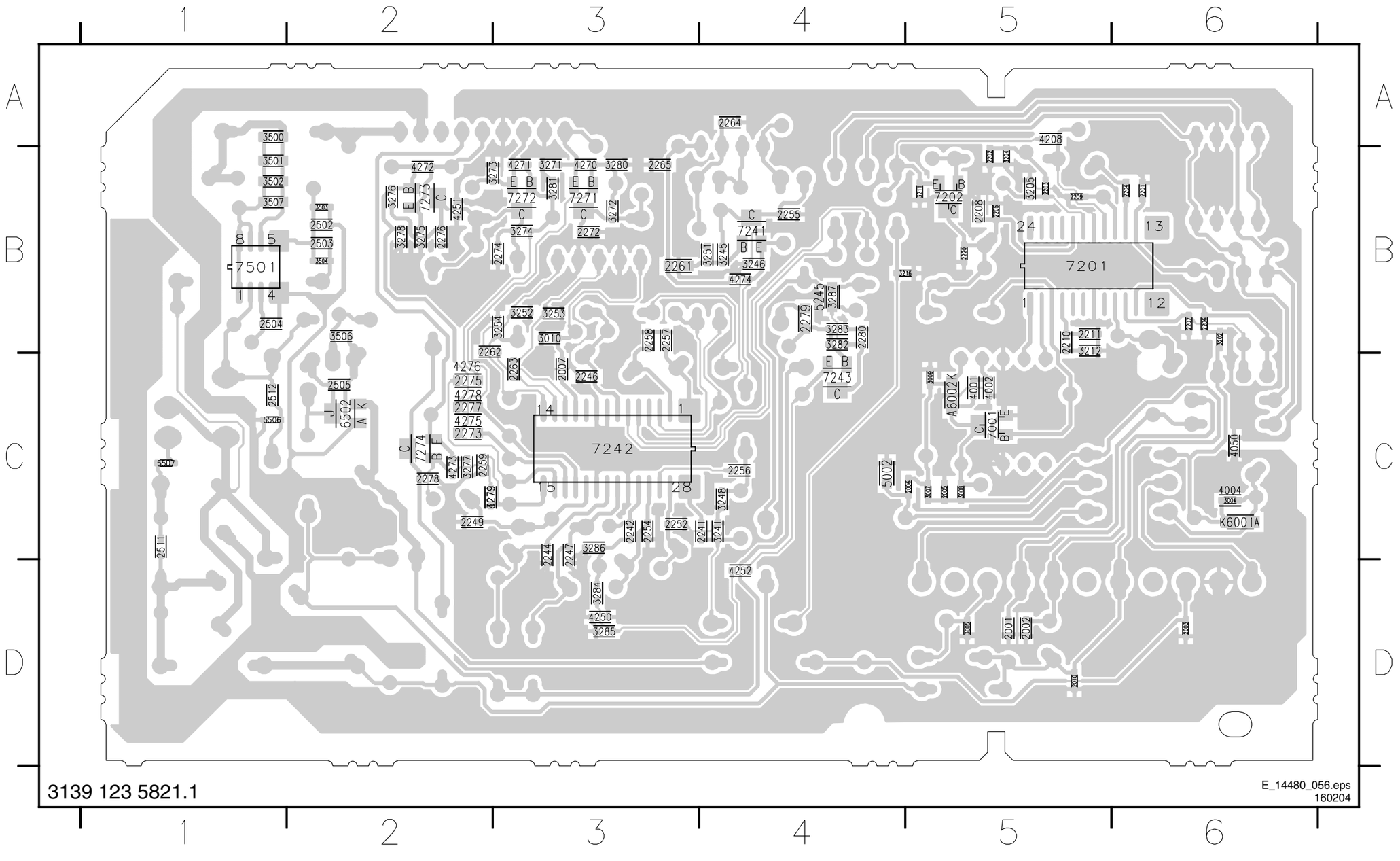

## Linearity & Panorama Panel

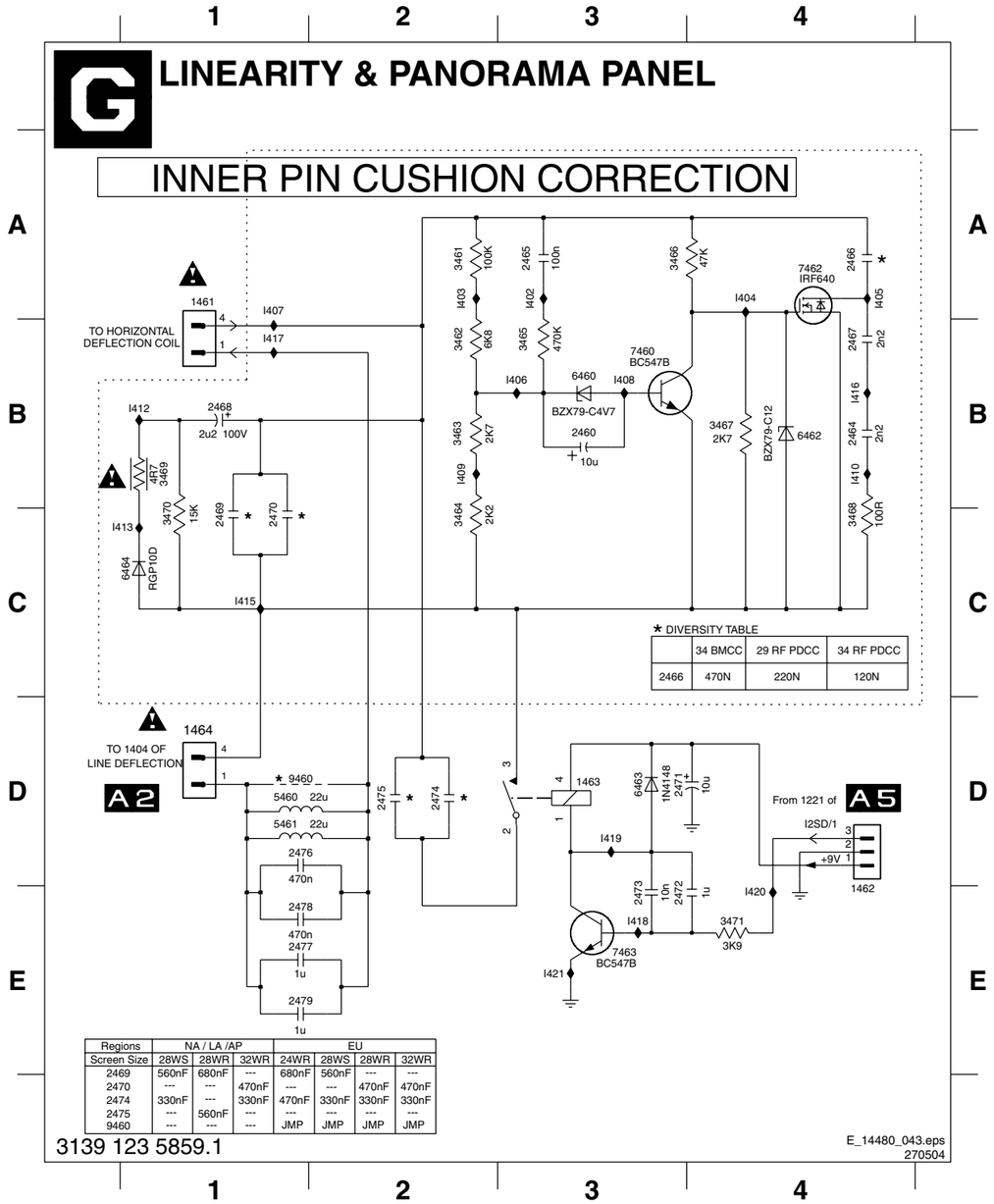


1461 A1
1462 D4
1463 D3
1464 D1
2460 B3
2464 B4
2465 A3
2466 A4
2467 B4
2468 B1
2469 C1
2470 C1
2471 D3
2472 E3
2473 E3
2474 D2
2475 D2
2476 D1
2477 E1
2478 E1
2479 E1
3461 A2
3462 B2
3463 B2
3464 C2
3465 B3
3466 A3
3467 B4
3468 C4
3469 B1
3470 C1
3471 E4
5460 D1
5461 D1
6460 B3
6462 B4
6463 D3
6464 C1
7460 B3
7462 A4
7463 E3
9460 D1
I402 A3
I403 A2
I404 A4
I405 A4
I406 B3
I407 A1
I408 B3
I409 B2
I410 B4
I412 B1
I413 C1
I415 C1
I416 B4
I417 B1
I418 E3
I419 D3
I420 E4
I421 E3

## Layout Linearity & Panorama Panel (Top Side)

| | | | | | | | | | |
|---|---|---|---|---|---|---|---|---|---|
| 1461 B2 | 2464 B2 | 2469 B2 | 2474 D2 | 2479 C2 | 3465 B1 | 3470 C1 | 6461 A2 | 7462 D2 | |
| 1462 D2 | 2465 B1 | 2470 B1 | 2475 C2 | 3461 B2 | 3466 B2 | 3471 D2 | 6462 D2 | 9460 B2 | |
| 1463 D1 | 2466 B2 | 2471 D2 | 2476 C2 | 3462 B1 | 3467 A2 | 5460 B2 | 6463 C1 | | |
| 1464 C2 | 2467 A2 | 2472 D2 | 2477 C2 | 3463 B1 | 3468 A2 | 5461 C2 | 7460 A1 | | |
| 2460 A1 | 2468 C2 | 2473 D2 | 2478 C2 | 3464 B1 | 3469 C2 | 6460 A1 | 7461 A2 | | |

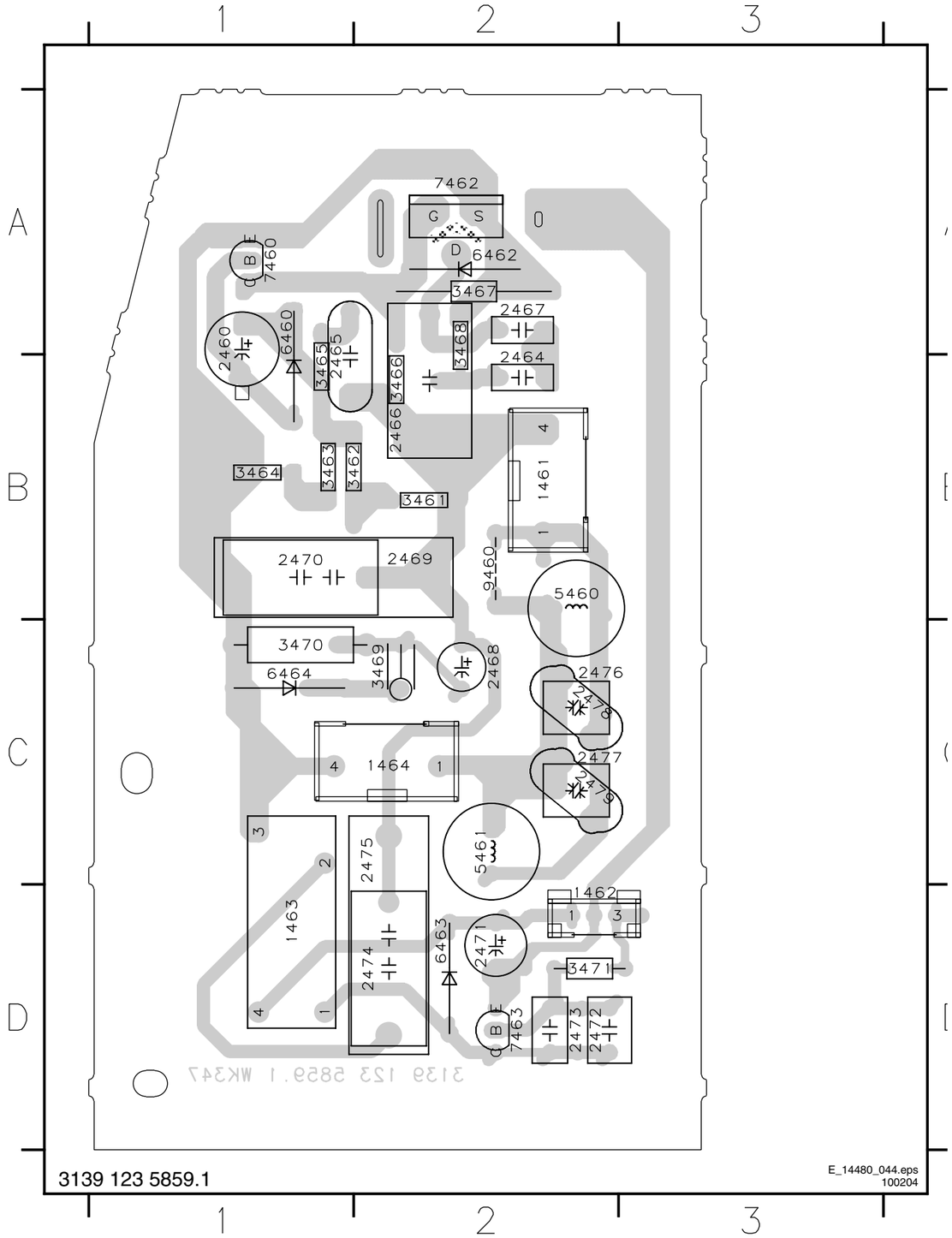

## LTI/CTI Interface Panel

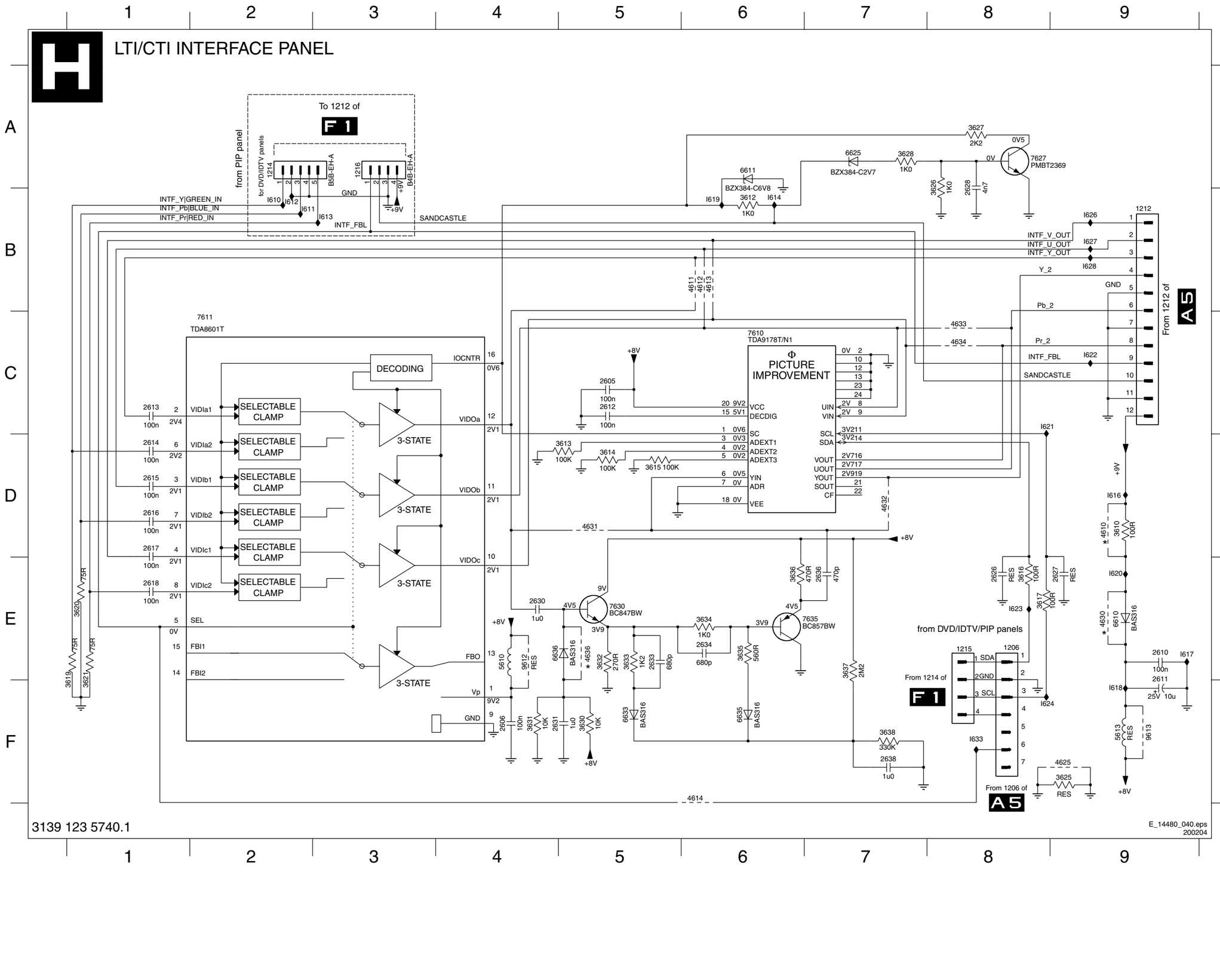


1206 E8
1212 B9
1214 A2
1215 E8
1216 A3
2605 C5
2606 F4
2610 E9
2611 E9
2612 C5
2613 C1
2614 D1
2615 D1
2616 D1
2617 D1
2618 E1
2626 E8
2627 E9
2628 A8
2630 E4
2631 F4
2633 E5
2634 E6
2636 E7
2638 F7
3610 D9
3612 B6
3613 D5
3614 D5
3615 D5
3616 E8
3617 E8
3619 E1
3620 E1
3621 E1
3625 F9
3626 A8
3627 A8
3628 A7
3630 F5
3631 F4
3632 E5
3633 E5
3634 E6
3635 E6
3636 E6
3637 E7
3638 F7
4610 D9
4611 B6
4612 B6
4613 B6
4614 F6
4625 F9
4630 E9
4631 D5
4632 D7
4633 C8
4634 C8
4636 E5
5610 E4
5613 F9
6610 E9
6611 A6
6625 A7
6633 F5
6635 F6
6636 E4
7610 C6
7611 C2
7627 A8
7630 E5
7635 E6
9612 E4
9613 F9
I610 B2
I611 B2
I612 B2
I613 B3
I614 B6
I616 B6
I617 E9
I618 F9
I619 B6
I620 E9
I621 C8
I622 C9
I623 E8
I624 F8
I626 B9
I627 B9
I628 B9
I633 F8

## Layout LTI/CTI Interface Panel (Top Side)

| | | | |
|---|---|---|---|
| 1206 A1 | 1216 A1 | 5613 A2 | 9615 A2 |
| 1212 A2 | 2611 A2 | 9612 A2 | 9616 A2 |
| 1214 A1 | 2636 A2 | 9613 A2 | 9617 A2 |
| 1215 A1 | 5610 A2 | 9614 A2 | 9618 A2 |

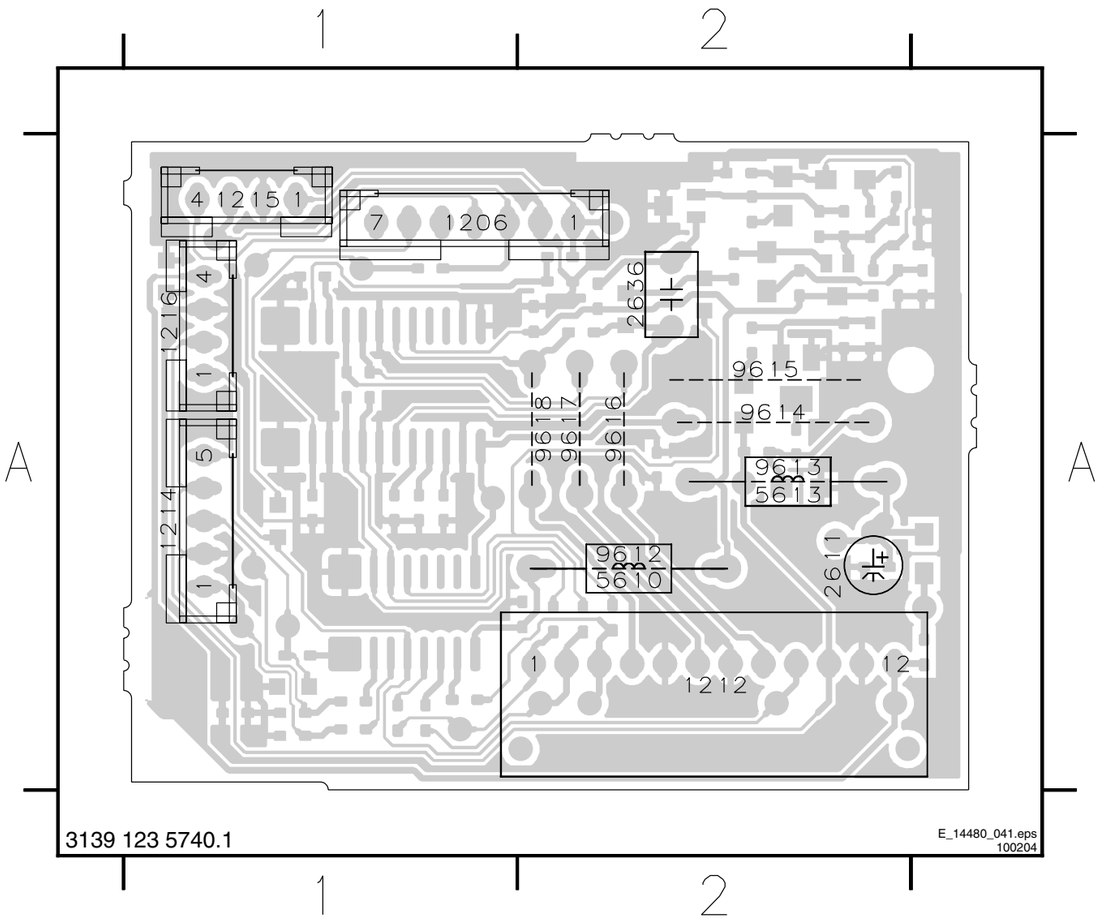


## Layout LTI/CTI Interface Panel (Bottom Side)

| | | | | | | | | | | |
|---|---|---|---|---|---|---|---|---|---|---|
| 2605 A1 | 2616 A2 | 2631 A1 | 3614 A2 | 3625 A2 | 3633 A1 | 4611 A1 | 4631 A1 | 6610 A1 | 7611 A2 | |
| 2606 A1 | 2617 A2 | 2633 A1 | 3615 A2 | 3626 A1 | 3634 A1 | 4612 A1 | 4632 A1 | 6611 A1 | 7627 A1 | |
| 2610 A1 | 2618 A2 | 2634 A1 | 3616 A1 | 3627 A1 | 3635 A1 | 4613 A1 | 4633 A2 | 6625 A1 | 7630 A1 | |
| 2612 A2 | 2626 A1 | 2638 A1 | 3617 A2 | 3628 A1 | 3636 A1 | 4614 A2 | 4634 A2 | 6633 A1 | 7635 A1 | |
| 2613 A2 | 2627 A2 | 3610 A1 | 3619 A2 | 3630 A1 | 3637 A1 | 4617 A2 | 4635 A1 | 6635 A1 | | |
| 2614 A2 | 2628 A1 | 3612 A1 | 3620 A2 | 3631 A1 | 3638 A1 | 4625 A2 | 4636 A1 | 6636 A1 | | |
| 2615 A2 | 2630 A1 | 3613 A2 | 3621 A2 | 3632 A1 | 4610 A1 | 4630 A1 | 4637 A1 | 7610 A2 | | |

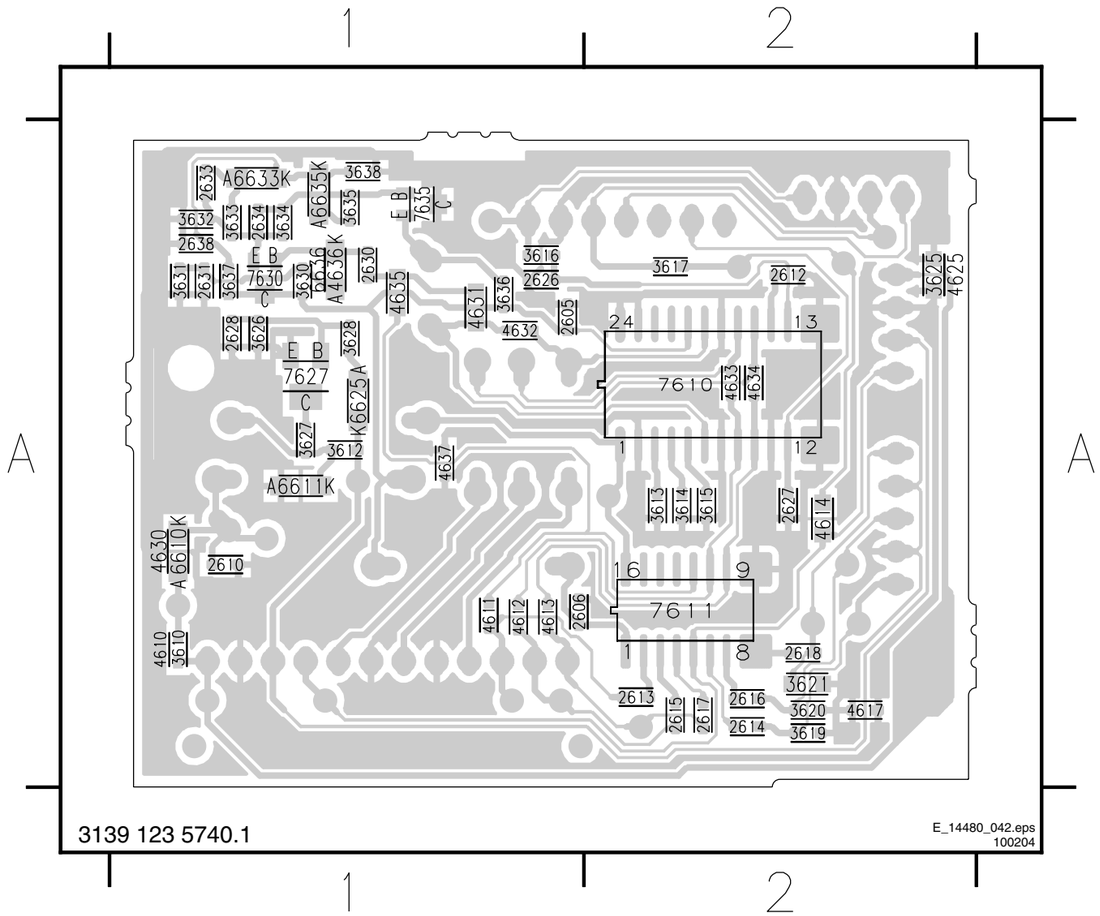

## Front Interface Panel (FL-13)

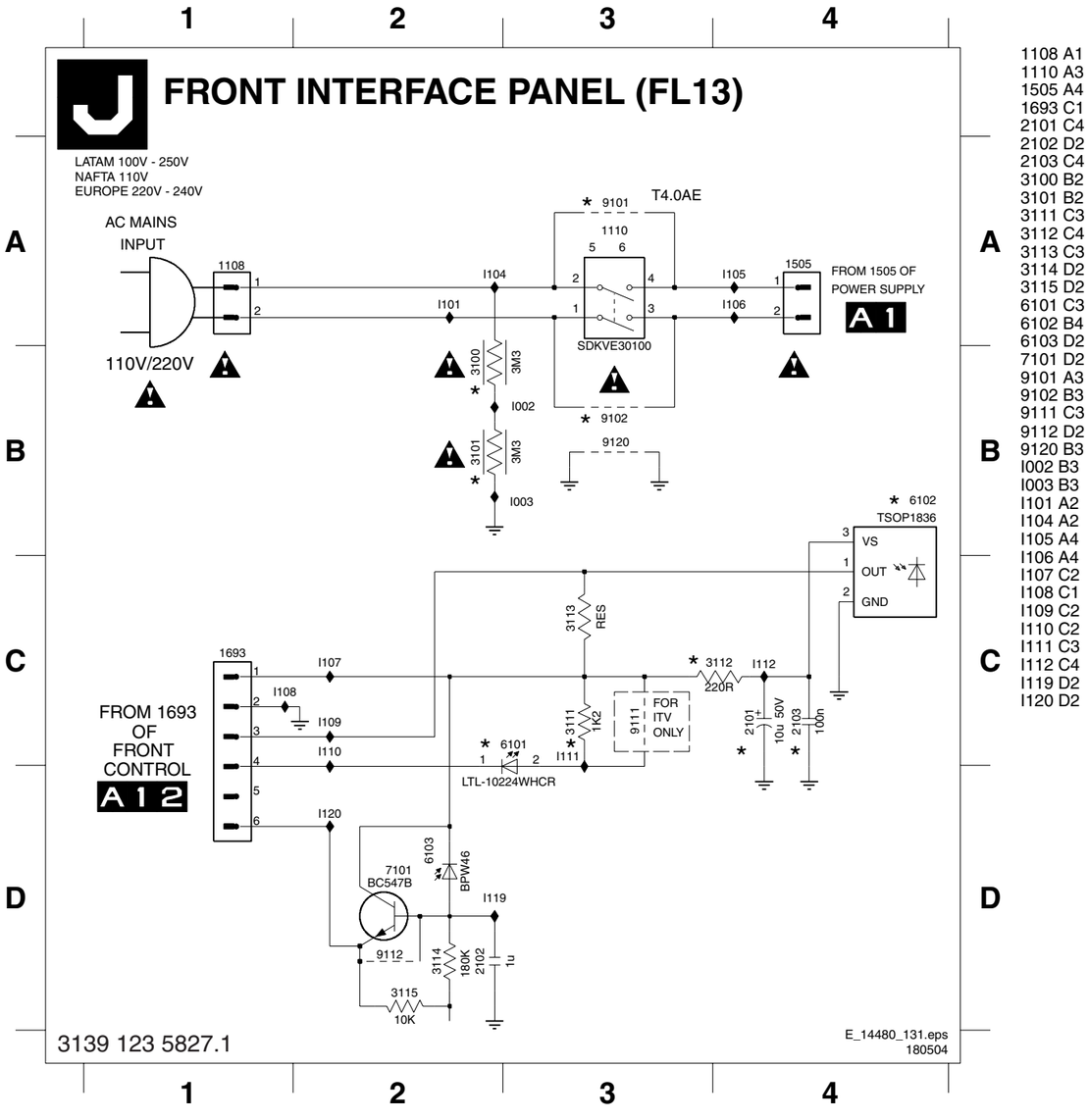


1108 A1
1110 A3
1505 A4
1693 C1
2101 C4
2102 D2
2103 C4
3100 B2
3101 B2
3111 C3
3112 C4
3113 C3
3114 D2
3115 D2
6101 C3
6102 B4
6103 D2
7101 D2
9101 A3
9102 B3
9111 C3
9112 D2
9120 B3
I002 B3
I003 B3
I101 A2
I104 A2
I105 A4
I106 A4
I107 C2
I108 C1
I109 C2
I110 C2
I111 C3
I112 C4
I119 D2
I120 D2

## Layout Front Interface Panel (FL-13) (Top Side)

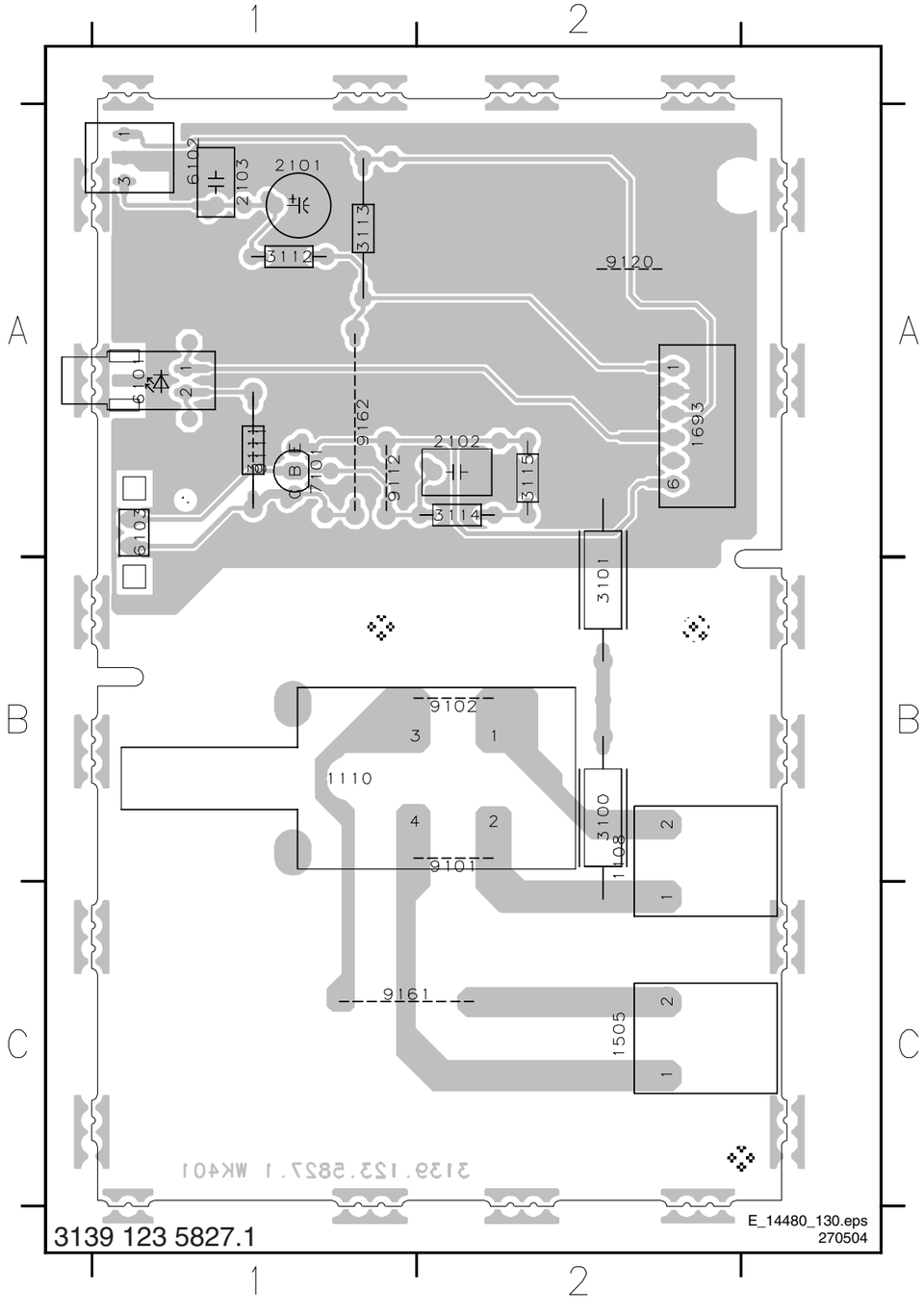


1108 B2
1110 B1
1505 C2
1693 A2
2101 A1
2102 A2
2103 A1
3100 B2
3101 B2
3111 A1
3112 A1
3113 A1
3114 A2
3115 A2
6101 A1
6102 A1
6103 A1
7101 A1
9101 B2
9102 B2
9111 A1
9112 A1
9120 A2
9161 C1
9162 A1

## Front Interface Panel (PV-2)

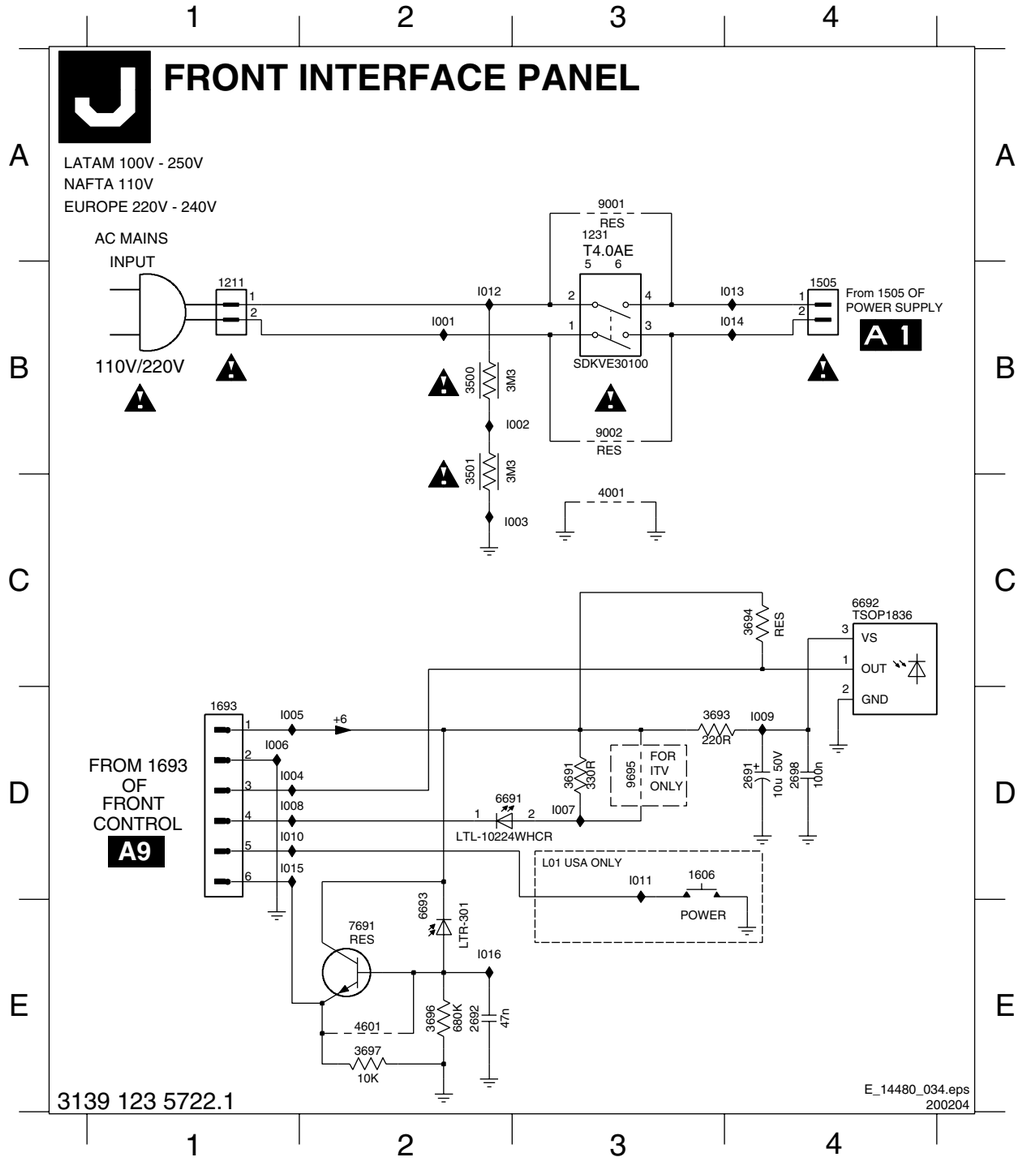


1211 B1
1231 A3
1505 B4
1606 D3
1693 D1
2691 D4
2692 E2
2698 D4
3500 B2
3501 B2
3691 D3
3693 D3
3694 C4
3696 E2
3697 E2
4001 C3
4601 E2
6691 D3
6692 C4
6693 E2
7691 E2
9001 A3
9002 B3
9695 D3
I001 B2
I002 B3
I003 C3
I004 D1
I005 D1
I006 D1
I007 D3
I008 D1
I009 D4
I010 D1
I011 D3
I012 B2
I013 B4
I014 B4
I015 D1
I016 E2

## Layout Front Interface Panel (PV-2) (Top Side)

1211 D1 1606 D4 2698 A3 3691 B3 6691 B4 9001 C1 9695 B3
1231 C3 1693 A3 3500 B2 3693 B3 6692 B4 9002 D2 9696 A3
1505 A1 2691 A4 3501 B3 3694 B3 6693 A4 9685 B3

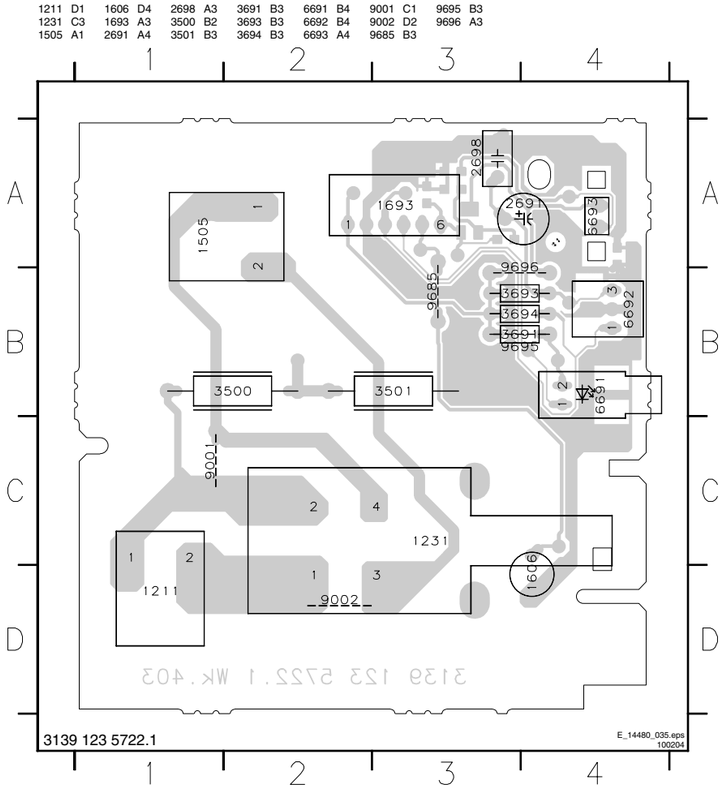


## Layout Front Interface Panel (PV-2) (Bottom Side)

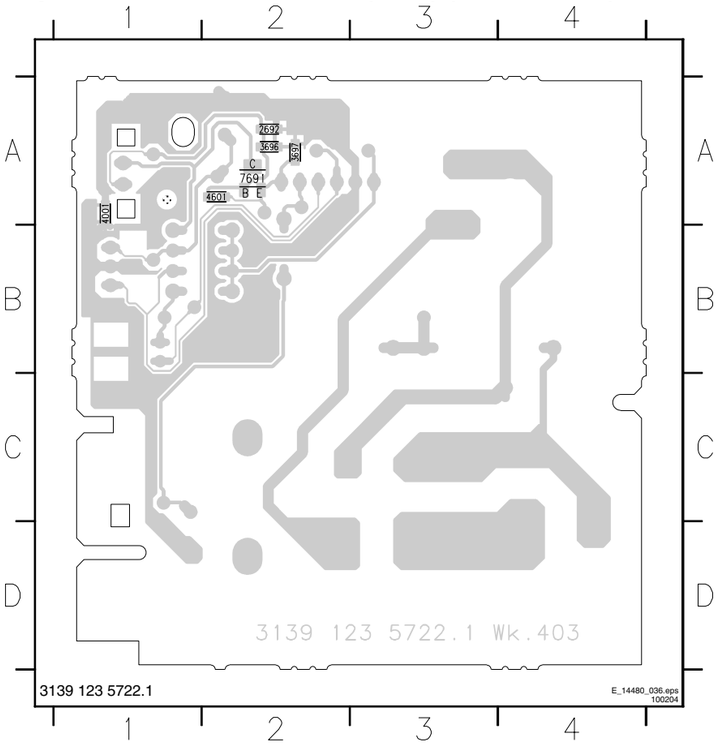

## Front Interface and Keyboard Panel

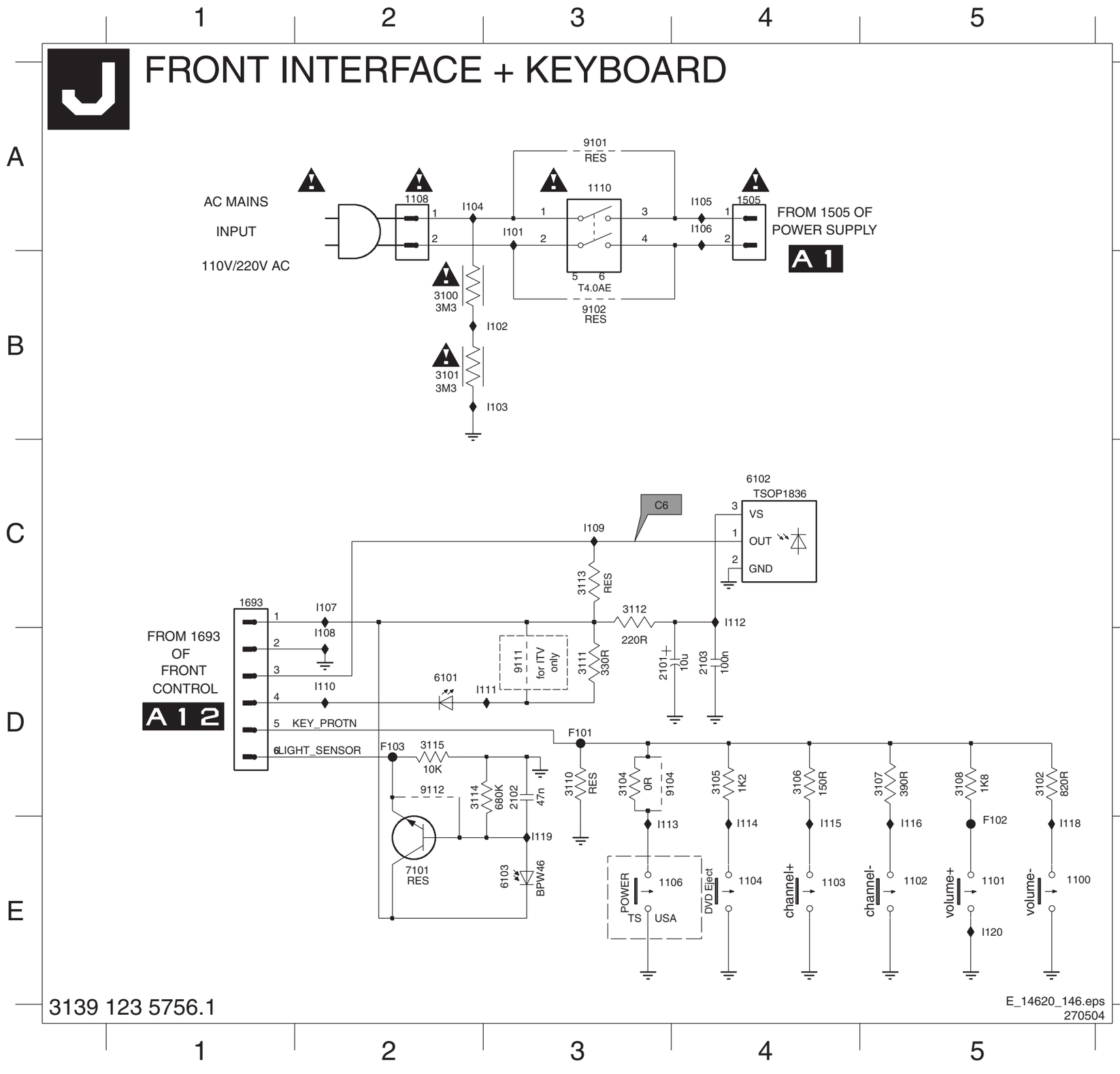


1100 E5
1101 E5
1102 E5
1103 E4
1104 E4
1106 E3
1108 A2
1110 A3
1505 A4
1693 C1
2101 D3
2102 D3
2103 D4
3100 B2
3101 B2
3102 D5
3104 D3
3105 D4
3106 D4
3107 D5
3108 D5
3110 D3
3111 D3
3112 C3
3113 C3
3114 D2
3115 D2
6101 D2
6102 C4
6103 E3
7101 E2
9101 A3
9102 B3
9104 D4
9111 D3
9112 D2
F101 D3
F102 D5
F103 D2
I101 A3
I102 B3
I103 B3
I104 A2
I105 A4
I106 A4
I107 C2
I108 D2
I109 C3
I110 D2
I111 D3
I112 C4
I113 E3
I114 E4
I115 E4
I116 E5
I118 E5
I119 E3
I120 E5

## Layout Front Interface and Keyboard Panel (Top Side)

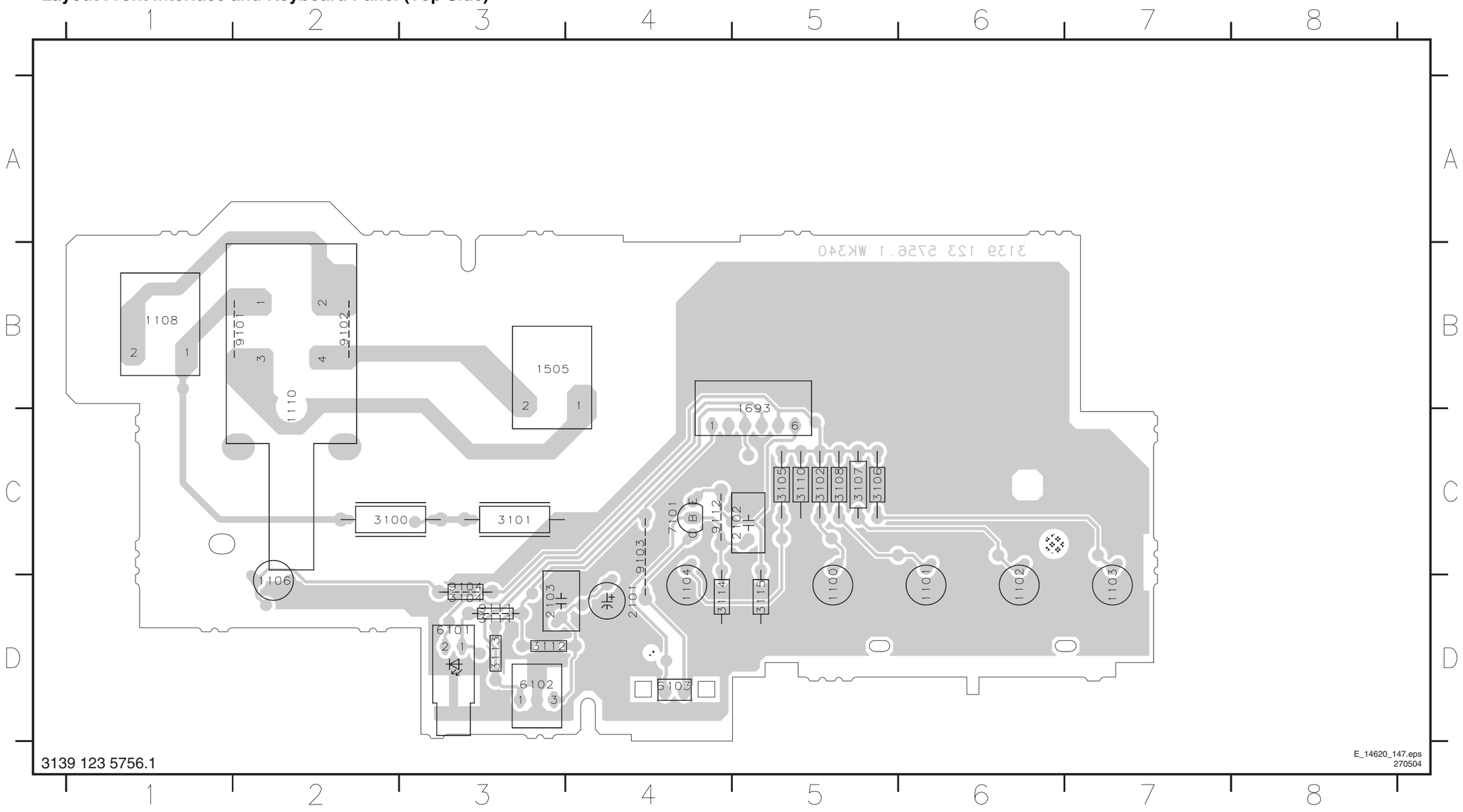


| | |
|---|---|
| 1100 | D5 |
| 1101 | D6 |
| 1102 | D6 |
| 1103 | D7 |
| 1104 | D4 |
| 1106 | D2 |
| 1108 | B1 |
| 1110 | B2 |
| 1505 | B3 |
| 1693 | B5 |
| 2101 | D4 |
| 2102 | C5 |
| 2103 | D3 |
| 3100 | C2 |
| 3101 | C3 |
| 3102 | C5 |
| 3104 | D3 |
| 3105 | C5 |
| 3106 | C5 |
| 3107 | C5 |
| 3108 | C5 |
| 3110 | C5 |
| 3111 | D3 |
| 3112 | D3 |
| 3113 | D3 |
| 3114 | D4 |
| 3115 | D5 |
| 6101 | D3 |
| 6102 | D3 |
| 6103 | D4 |
| 7101 | C4 |
| 9101 | B2 |
| 9102 | B2 |
| 9103 | C4 |
| 9104 | D3 |
| 9111 | D3 |
| 9112 | C4 |

# 8. Alignments

Index of this chapter:
1. General Alignment Conditions
2. Hardware Alignments
3. Software Alignments and Settings

**Note:**
- The Service Default Mode (SDM) and Service Alignment Mode (SAM) are described in chapter 5 “Service Modes, ...”.
- Menu navigation is done with the CURSOR UP, DOWN, LEFT, or RIGHT keys of the remote control transmitter.

## 8.1 General Alignment Conditions

Perform all electrical adjustments under the following conditions:
- AC voltage and frequency: 120 V_ac / 60 Hz or 240 V_ac / 50 Hz (region dependent).
- Connect the set to the Mains voltage via an isolation transformer with a low internal resistance.
- Allow the set to warm up for approximately 20 minutes.
- Measure the voltages and waveforms in relation to chassis ground (with the exception of the voltages on the primary side of the power supply). Never use the cooling fins / plates as ground.
- Test probe: Ri > 10 Mohm; Ci < 2.5 pF.
- Use an isolated trimmer / screwdriver to perform the alignments.

## 8.2 Hardware Alignments

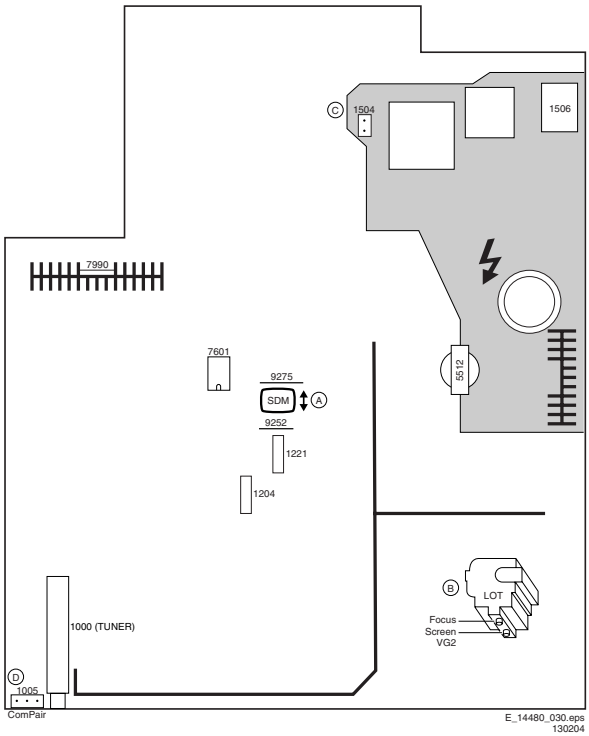


**Figure 8-1 Top view family board**

### 8.2.1 Vg2 Adjustment

1. Activate the SAM.
2. Go to the WHITE TONE sub menu.
3. Set the values of NORMAL RED, GREEN and BLUE to “32”.
4. Go, via the MENU key, to the normal user menu and set
5. SATURATION/COLOR to “0”.
6. CONTRAST to “0”.
7. BRIGHTNESS to minimum (OSD just visible).
8. Return to the SAM via the MENU key.
9. Connect the RF output of a pattern generator to the antenna input. Test pattern is a 'black' picture (blank screen on CRT without any OSD info) with a signal strength of 1 V_pp.
10. Set the channel of the oscilloscope to 50 V/div and the time base to 0.2 ms (external triggering on the vertical pulse). Ground the scope at the CRT panel and connect a 10:1 probe to one of the cathodes of the picture tube socket (see diagram B).
11. Measure the cut off pulse during first full line after the frame blanking (see figure “V_cutoff waveform”). You will see two pulses, one being the “cut off” pulse and the other being the “white drive” pulse. Choose the one with the lowest value; this is the “cut off” pulse.
12. Select the cathode with the highest V_dc value for the alignment. Adjust the V_cutoff of this gun with the SCREEN potentiometer (see figure “Top view family board”) on the LOT to 160 V_dc, except for the 25/28BLD picture tube (Black Line Display, for EU only); this tube must be aligned to 140 V_dc.
13. Restore BRIGHTNESS and CONTRAST to normal (= 31).

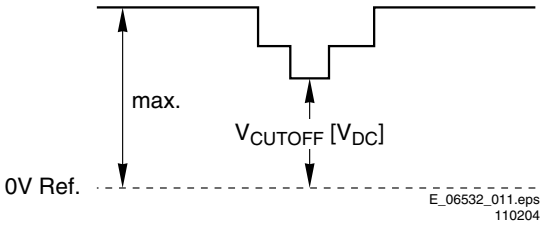


**Figure 8-2 V_cutoff waveform**

### 8.2.2 Focusing

1. Tune the set to a circle or crosshatch test pattern (use an external video pattern generator).
2. Choose picture mode NATURAL (or MOVIES) with the SMART PICTURE button on the remote control transmitter.
3. Adjust the FOCUS potentiometer (see figure “Top view family board”) until the vertical lines at 2/3 from east and west, at the height of the centreline, are of minimum width without visible haze.

## 8.3 Software Alignments and Settings

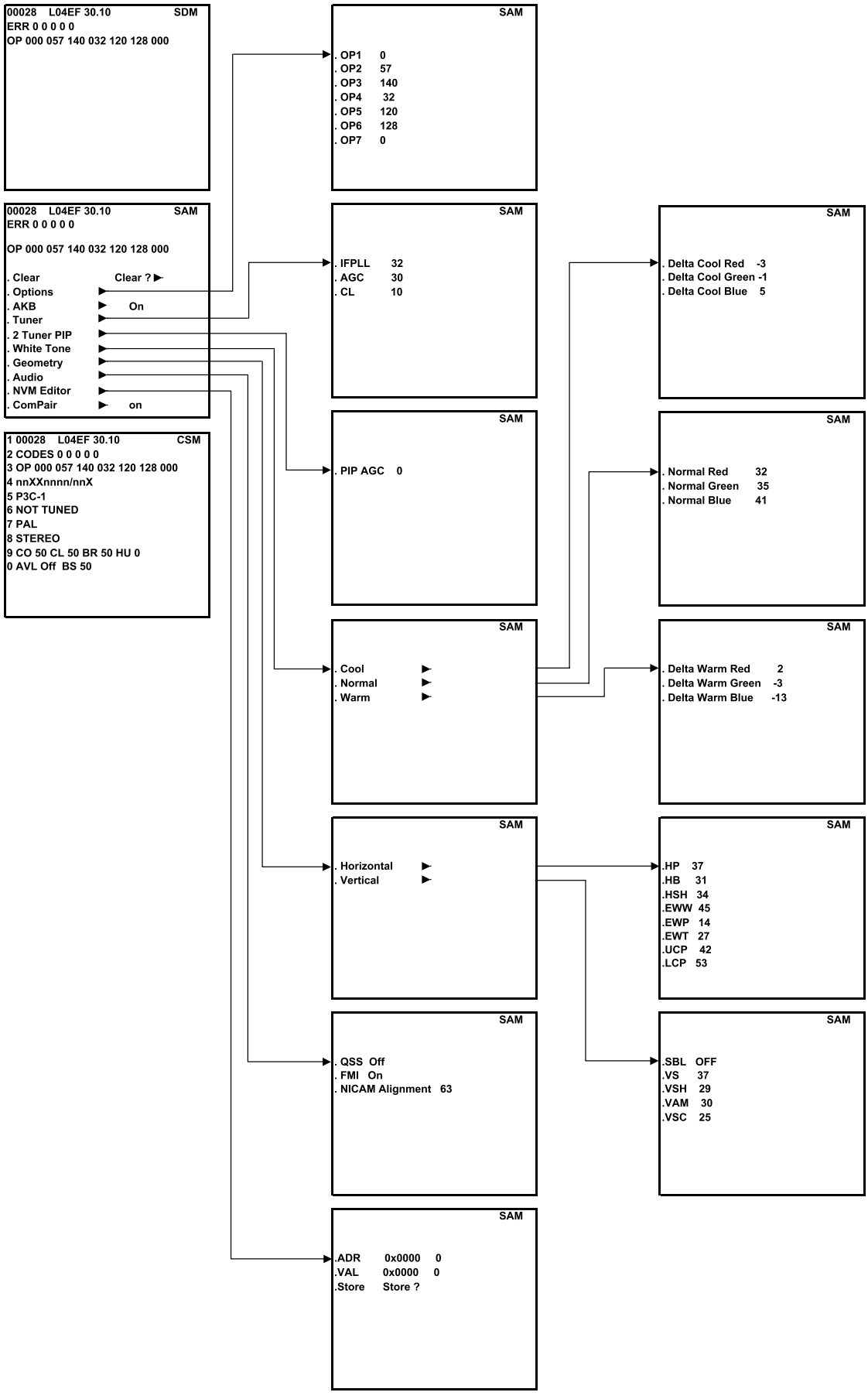


E_14480_143.eps
260504

**Figure 8-3 Service Mode overview**

Enter the Service Alignment Mode (see also chapter 5 “Service Modes, ....”). The SAM menu will now appear on the screen. Select one of the following alignments:

- Options
- Tuner
- White Tone
- Geometry
- Audio

### 8.3.1 Options

Options are used to control the presence/absence of certain features and hardware.

***How to change an Option Byte***

An Option Byte represents a number of different options. Changing these bytes directly, makes it possible to set all options very fast. All options are controlled via seven option bytes. Select the option byte (OP1.. OP7) with the MENU UP/ DOWN keys, and enter the new value.

Leaving the OPTION submenu saves the changes in the Option Byte settings. Some changes will only take effect after the set has been switched “off” and “on” with the AC power switch (cold start).

***How to calculate the value of an Option Byte***

- Calculate an Option Byte value (OP1 .. OP7) in the following way:
- Check the status of the single option bits (OB): are they enabled (1) or disabled (0).
- When an option bit is enabled (1) it represents a certain value (see column “Bit value” in table below). When an option bit is disabled, its value is 0.
- The total value of an Option Byte (decimal) is formed by the sum of its eight option bits. The factory values are printed on a sticker on the CRT.

**Table 8-1 Option Byte calculation**

| Bit (value) | OP1 | OP2 | OP3 | OP4 | OP5 | OP6 | OP7 |
|---|---|---|---|---|---|---|---|
| 0 (1) | OB10 | OB20 | OB30 | OB40 | OB50 | OB60 | OB70 |
| 1 (2) | OB11 | OB21 | OB31 | OB41 | OB51 | OB61 | OB71 |
| 2 (4) | OB12 | OB22 | OB32 | OB42 | OB52 | OB62 | OB72 |
| 3 (8) | OB13 | OB23 | OB33 | OB43 | OB53 | OB63 | OB73 |
| 4 (16) | OB14 | OB24 | OB34 | OB44 | OB54 | OB64 | OB74 |
| 5 (32) | OB15 | OB25 | OB35 | OB45 | OB55 | OB65 | OB75 |
| 6 (64) | OB16 | OB26 | OB36 | OB46 | OB56 | OB66 | OB76 |
| 7 (128) | OB17 | OB27 | OB37 | OB47 | OB57 | OB67 | OB77 |
| **Total:** | **Sum** | **Sum** | **Sum** | **Sum** | **Sum** | **Sum** | **Sum** |

***Option Bit Assignment***

Following are the option bit assignments for all software clusters.

**Table 8-2 Option code overview per model**

| Bit | Byte_0 | Description | 21PT5458/01 | 21PT5509/01 | 21PT5518/01 | 21PT5518/05 | 21PT5518/58 | 21PT5618/01 | 21PT5618/05 | 21PT5618/58 | 25PT4458/01 | 25PT4458/05 | 28PT4458/01 | 28PT4458/05 | 28PT5008/01 | 28PT5008/05 | 28PT4408/01 | 28PT4418/01 | 29PT5408/01 | 29PT5408/58 | 29PT5458/01 | 29PT5509/01 | 29PT5518/01 | 29PT5518/05 | 29PT5518/58 | 29PT5618/01 | 29PT5618/05 | 29PT5618/58 | 24PW6518/01 | 24PW6518/05 | 28PW5408/01 | 28PW6008/01 | 28PW6008/05 | 28PW6008/58 | 28PW6408/01 | 28PW6408/05 | 28PW6408/58 | 28PW6508/01 | 28PW6518/01 | 28PW6518/05 | 28PW6518/58 | 28PW6558/01 | 28PW6618/01 | 28PW6618/05 | 28PW6618/58 | 32PW6408/01 | 32PW6408/05 | 32PW6518/01 | 32PW6518/05 | 32PW6618/01 | 32PW6618/05 |
|---|---|---|---|---|---|---|---|---|---|---|---|---|---|---|---|---|---|---|---|---|---|---|---|---|---|---|---|---|---|---|---|---|---|---|---|---|---|---|---|---|---|---|---|---|---|---|---|---|---|---|
| 7 | MVK | | 0 | 0 | 0 | 0 | 0 | 0 | 0 | 0 | 0 | 0 | 0 | 0 | 0 | 0 | 0 | 0 | 0 | 0 | 0 | 0 | 0 | 0 | 0 | 0 | 0 | 0 | 0 | 0 | 0 | 0 | 0 | 0 | 0 | 0 | 0 | 0 | 0 | 0 | 0 | 0 | 0 | 0 | 0 | 0 | 0 | 0 | 0 | 0 |
| 6 | OSVE | Black current measuring in overscan | 0 | 0 | 0 | 0 | 0 | 0 | 0 | 0 | 0 | 0 | 0 | 0 | 0 | 0 | 0 | 0 | 0 | 0 | 0 | 0 | 0 | 0 | 0 | 0 | 0 | 0 | 0 | 0 | 0 | 0 | 0 | 0 | 0 | 0 | 0 | 0 | 0 | 0 | 0 | 0 | 0 | 0 | 0 | 0 | 0 | 0 | 0 | 0 |
| 5 | TFR | DC transfer ratio of luminance signal | 0 | 0 | 0 | 0 | 0 | 0 | 0 | 0 | 0 | 0 | 0 | 0 | 0 | 0 | 0 | 0 | 0 | 0 | 0 | 0 | 0 | 0 | 0 | 0 | 0 | 0 | 0 | 0 | 0 | 0 | 0 | 0 | 0 | 0 | 0 | 0 | 0 | 0 | 0 | 0 | 0 | 0 | 0 | 0 | 0 | 0 | 0 | 0 |
| 4 | FSL | Forced slicing level for vertical sync | 0 | 0 | 0 | 0 | 0 | 0 | 0 | 0 | 0 | 0 | 0 | 0 | 0 | 0 | 0 | 0 | 0 | 0 | 0 | 0 | 0 | 0 | 0 | 0 | 0 | 0 | 0 | 0 | 0 | 0 | 0 | 0 | 0 | 0 | 0 | 0 | 0 | 0 | 0 | 0 | 0 | 0 | 0 | 0 | 0 | 0 | 0 | 0 |
| 3 | HP2 | Synchronization of OSD/Text display | 0 | 0 | 0 | 0 | 0 | 0 | 0 | 0 | 0 | 0 | 0 | 0 | 0 | 0 | 0 | 0 | 0 | 0 | 0 | 0 | 0 | 0 | 0 | 0 | 0 | 0 | 0 | 0 | 0 | 0 | 0 | 0 | 0 | 0 | 0 | 0 | 0 | 0 | 0 | 0 | 0 | 0 | 0 | 0 | 0 | 0 | 0 | 0 |
| 2 | HCO | EHT tracking mode | 1 | 1 | 1 | 1 | 1 | 1 | 1 | 1 | 1 | 1 | 1 | 1 | 1 | 1 | 1 | 1 | 1 | 1 | 1 | 1 | 1 | 1 | 1 | 1 | 1 | 1 | 1 | 1 | 1 | 1 | 1 | 1 | 1 | 1 | 1 | 1 | 1 | 1 | 1 | 1 | 1 | 1 | 1 | 1 | 1 | 1 | 1 | 1 |
| 1 | FMI | Connection of output of QSS amplifier | 0 | 0 | 0 | 0 | 0 | 0 | 0 | 0 | 0 | 0 | 0 | 0 | 0 | 0 | 0 | 0 | 0 | 0 | 0 | 0 | 0 | 0 | 0 | 0 | 0 | 0 | 0 | 0 | 0 | 0 | 0 | 0 | 0 | 0 | 0 | 0 | 0 | 0 | 0 | 0 | 0 | 0 | 0 | 0 | 0 | 0 | 0 | 0 |
| 0 | QSS | Mode of quasi split sound amplifier | 1 | 1 | 1 | 1 | 1 | 1 | 1 | 1 | 1 | 1 | 1 | 1 | 1 | 1 | 1 | 1 | 1 | 1 | 1 | 1 | 1 | 1 | 1 | 1 | 1 | 1 | 1 | 1 | 1 | 1 | 1 | 1 | 1 | 1 | 1 | 1 | 1 | 1 | 1 | 1 | 1 | 1 | 1 | 1 | 1 | 1 | 1 | 1 |
| | Decimal | | 5 | 5 | 5 | 5 | 5 | 5 | 5 | 5 | 5 | 5 | 5 | 5 | 5 | 5 | 5 | 5 | 5 | 5 | 5 | 5 | 5 | 5 | 5 | 5 | 5 | 5 | 5 | 5 | 5 | 5 | 5 | 5 | 5 | 5 | 5 | 5 | 5 | 5 | 5 | 5 | 5 | 5 | 5 | 5 | 5 | 5 | 5 | 5 |
| | Hex | | 05 | 05 | 05 | 05 | 05 | 05 | 05 | 05 | 05 | 05 | 05 | 05 | 05 | 05 | 05 | 05 | 05 | 05 | 05 | 05 | 05 | 05 | 05 | 05 | 05 | 05 | 05 | 05 | 05 | 05 | 05 | 05 | 05 | 05 | 05 | 05 | 05 | 05 | 05 | 05 | 05 | 05 | 05 | 05 | 05 | 05 | 05 | 05 |
| Bit | Byte_1 | Description | | | | | | | | | | | | | | | | | | | | | | | | | | | | | | | | | | | | | | | | | | | | | | | | |
| 7 | SVMA | Scavem On / Off | 0 | 0 | 0 | 0 | 0 | 0 | 0 | 0 | 0 | 0 | 0 | 0 | 0 | 0 | 0 | 0 | 0 | 0 | 0 | 0 | 0 | 0 | 0 | 0 | 0 | 0 | 0 | 0 | 0 | 0 | 0 | 0 | 0 | 0 | 0 | 0 | 0 | 0 | 0 | 0 | 0 | 0 | 0 | 0 | 0 | 0 | 0 | 0 |
| 6 | SAM Mode | Service Align mode on/off | 0 | 0 | 0 | 0 | 0 | 0 | 0 | 0 | 0 | 0 | 0 | 0 | 0 | 0 | 0 | 0 | 0 | 0 | 0 | 0 | 0 | 0 | 0 | 0 | 0 | 0 | 0 | 0 | 0 | 0 | 0 | 0 | 0 | 0 | 0 | 0 | 0 | 0 | 0 | 0 | 0 | 0 | 0 | 0 | 0 | 0 | 0 | 0 |
| 5 | SDM Mode | Service default mode on/off | 0 | 0 | 0 | 0 | 0 | 0 | 0 | 0 | 0 | 0 | 0 | 0 | 0 | 0 | 0 | 0 | 0 | 0 | 0 | 0 | 0 | 0 | 0 | 0 | 0 | 0 | 0 | 0 | 0 | 0 | 0 | 0 | 0 | 0 | 0 | 0 | 0 | 0 | 0 | 0 | 0 | 0 | 0 | 0 | 0 | 0 | 0 | 0 |
| 4 | White Pattern On | Last colour pattern status in factory mode | 0 | 0 | 0 | 0 | 0 | 0 | 0 | 0 | 0 | 0 | 0 | 0 | 0 | 0 | 0 | 0 | 0 | 0 | 0 | 0 | 0 | 0 | 0 | 0 | 0 | 0 | 0 | 0 | 0 | 0 | 0 | 0 | 0 | 0 | 0 | 0 | 0 | 0 | 0 | 0 | 0 | 0 | 0 | 0 | 0 | 0 | 0 | 0 |
| 3 | Continuous Factory | Continuous factory mode | 0 | 0 | 0 | 0 | 0 | 0 | 0 | 0 | 0 | 0 | 0 | 0 | 0 | 0 | 0 | 0 | 0 | 0 | 0 | 0 | 0 | 0 | 0 | 0 | 0 | 0 | 0 | 0 | 0 | 0 | 0 | 0 | 0 | 0 | 0 | 0 | 0 | 0 | 0 | 0 | 0 | 0 | 0 | 0 | 0 | 0 | 0 | 0 |
| 2 | Reserved | | 0 | 0 | 0 | 0 | 0 | 0 | 0 | 0 | 0 | 0 | 0 | 0 | 0 | 0 | 0 | 0 | 0 | 0 | 0 | 0 | 0 | 0 | 0 | 0 | 0 | 0 | 0 | 0 | 0 | 0 | 0 | 0 | 0 | 0 | 0 | 0 | 0 | 0 | 0 | 0 | 0 | 0 | 0 | 0 | 0 | 0 | 0 | 0 |
| 1 | Reserved | | 0 | 0 | 0 | 0 | 0 | 0 | 0 | 0 | 0 | 0 | 0 | 0 | 0 | 0 | 0 | 0 | 0 | 0 | 0 | 0 | 0 | 0 | 0 | 0 | 0 | 0 | 0 | 0 | 0 | 0 | 0 | 0 | 0 | 0 | 0 | 0 | 0 | 0 | 0 | 0 | 0 | 0 | 0 | 0 | 0 | 0 | 0 | 0 |
| 0 | Reserved | | 0 | 0 | 0 | 0 | 0 | 0 | 0 | 0 | 0 | 0 | 0 | 0 | 0 | 0 | 0 | 0 | 0 | 0 | 0 | 0 | 0 | 0 | 0 | 0 | 0 | 0 | 0 | 0 | 0 | 0 | 0 | 0 | 0 | 0 | 0 | 0 | 0 | 0 | 0 | 0 | 0 | 0 | 0 | 0 | 0 | 0 | 0 | 0 |
| | Decimal | | 0 | 0 | 0 | 0 | 0 | 0 | 0 | 0 | 0 | 0 | 0 | 0 | 0 | 0 | 0 | 0 | 0 | 0 | 0 | 0 | 0 | 0 | 0 | 0 | 0 | 0 | 0 | 0 | 0 | 0 | 0 | 0 | 0 | 0 | 0 | 0 | 0 | 0 | 0 | 0 | 0 | 0 | 0 | 0 | 0 | 0 | 0 | 0 |
| | Hex | | 00 | 00 | 00 | 00 | 00 | 00 | 00 | 00 | 00 | 00 | 00 | 00 | 00 | 00 | 00 | 00 | 00 | 00 | 00 | 00 | 00 | 00 | 00 | 00 | 00 | 00 | 00 | 00 | 00 | 00 | 00 | 00 | 00 | 00 | 00 | 00 | 00 | 00 | 00 | 00 | 00 | 00 | 00 | 00 | 00 | 00 | 00 | 00 |
| Bit | Byte_2 | Description | | | | | | | | | | | | | | | | | | | | | | | | | | | | | | | | | | | | | | | | | | | | | | | | |
| 7 | PSNS | For PAL colour enhancement in ES4 | 0 | 0 | 0 | 0 | 0 | 0 | 0 | 0 | 0 | 0 | 0 | 0 | 0 | 0 | 0 | 0 | 0 | 0 | 0 | 0 | 0 | 0 | 0 | 0 | 0 | 0 | 0 | 0 | 0 | 0 | 0 | 0 | 0 | 0 | 0 | 0 | 0 | 0 | 0 | 0 | 0 | 0 | 0 | 0 | 0 | 0 | 0 | 0 |
| 6 | Factory Mode | Factory mode on | 0 | 0 | 0 | 0 | 0 | 0 | 0 | 0 | 0 | 0 | 0 | 0 | 0 | 0 | 0 | 0 | 0 | 0 | 0 | 0 | 0 | 0 | 0 | 0 | 0 | 0 | 0 | 0 | 0 | 0 | 0 | 0 | 0 | 0 | 0 | 0 | 0 | 0 | 0 | 0 | 0 | 0 | 0 | 0 | 0 | 0 | 0 | 0 |
| 5 | Surf Mode | Surf mode on/off | 0 | 0 | 0 | 0 | 0 | 0 | 0 | 0 | 0 | 0 | 0 | 0 | 0 | 0 | 0 | 0 | 0 | 0 | 0 | 0 | 0 | 0 | 0 | 0 | 0 | 0 | 0 | 0 | 0 | 0 | 0 | 0 | 0 | 0 | 0 | 0 | 0 | 0 | 0 | 0 | 0 | 0 | 0 | 0 | 0 | 0 | 0 | 0 |
| 4 | Child Lock Mode | Child lock enabled | 0 | 0 | 0 | 0 | 0 | 0 | 0 | 0 | 0 | 0 | 0 | 0 | 0 | 0 | 0 | 0 | 0 | 0 | 0 | 0 | 0 | 0 | 0 | 0 | 0 | 0 | 0 | 0 | 0 | 0 | 0 | 0 | 0 | 0 | 0 | 0 | 0 | 0 | 0 | 0 | 0 | 0 | 0 | 0 | 0 | 0 | 0 | 0 |
| 3 | Last Power Mode | Last power status of the set | 1 | 1 | 1 | 1 | 1 | 1 | 1 | 1 | 1 | 1 | 1 | 1 | 1 | 1 | 1 | 1 | 1 | 1 | 1 | 1 | 1 | 1 | 1 | 1 | 1 | 1 | 1 | 1 | 1 | 1 | 1 | 1 | 1 | 1 | 1 | 1 | 1 | 1 | 1 | 1 | 1 | 1 | 1 | 1 | 1 | 1 | 1 | 1 |
| 2 | Cable Mode | Cable/Antenna mode | 0 | 0 | 0 | 0 | 0 | 0 | 0 | 0 | 0 | 0 | 0 | 0 | 0 | 0 | 0 | 0 | 0 | 0 | 0 | 0 | 0 | 0 | 0 | 0 | 0 | 0 | 0 | 0 | 0 | 0 | 0 | 0 | 0 | 0 | 0 | 0 | 0 | 0 | 0 | 0 | 0 | 0 | 0 | 0 | 0 | 0 | 0 | 0 |

| Bit | Byte_0 | Description | 21PT5458/01 | 21PT5509/01 | 21PT5518/01 | 21PT5518/05 | 21PT5518/58 | 21PT5618/01 | 21PT5618/05 | 21PT5618/58 | 25PT4458/01 | 25PT4458/05 | 28PT4458/01 | 28PT4458/05 | 28PT5008/01 | 28PT5008/05 | 28PT4408/01 | 28PT4418/01 | 29PT5408/01 | 29PT5408/58 | 29PT5458/01 | 29PT5509/01 | 29PT5518/01 | 29PT5518/05 | 29PT5518/58 | 29PT5618/01 | 29PT5618/05 | 29PT5618/58 | 24PW6518/01 | 24PW6518/05 | 28PW5408/01 | 28PW6008/01 | 28PW6008/05 | 28PW6008/58 | 28PW6408/01 | 28PW6408/05 | 28PW6408/58 | 28PW6508/01 | 28PW6518/01 | 28PW6518/05 | 28PW6518/58 | 28PW6558/01 | 28PW6618/01 | 28PW6618/05 | 28PW6618/58 | 32PW6408/01 | 32PW6408/05 | 32PW6518/01 | 32PW6518/05 | 32PW6618/01 | 32PW6618/05 |
|---|---|---|---|---|---|---|---|---|---|---|---|---|---|---|---|---|---|---|---|---|---|---|---|---|---|---|---|---|---|---|---|---|---|---|---|---|---|---|---|---|---|---|---|---|---|---|---|---|---|---|
| 1 | Tuner Auto Mode | Auto mode | 0 | 0 | 0 | 0 | 0 | 0 | 0 | 0 | 0 | 0 | 0 | 0 | 0 | 0 | 0 | 0 | 0 | 0 | 0 | 0 | 0 | 0 | 0 | 0 | 0 | 0 | 0 | 0 | 0 | 0 | 0 | 0 | 0 | 0 | 0 | 0 | 0 | 0 | 0 | 0 | 0 | 0 | 0 | 0 | 0 | 0 | 0 | 0 |
| 0 | Mute Status | Mute status | 0 | 0 | 0 | 0 | 0 | 0 | 0 | 0 | 0 | 0 | 0 | 0 | 0 | 0 | 0 | 0 | 0 | 0 | 0 | 0 | 0 | 0 | 0 | 0 | 0 | 0 | 0 | 0 | 0 | 0 | 0 | 0 | 0 | 0 | 0 | 0 | 0 | 0 | 0 | 0 | 0 | 0 | 0 | 0 | 0 | 0 | 0 | 0 |
| | Decimal | | 8 | 8 | 8 | 8 | 8 | 8 | 8 | 8 | 8 | 8 | 8 | 8 | 8 | 8 | 8 | 8 | 8 | 8 | 8 | 8 | 8 | 8 | 8 | 8 | 8 | 8 | 8 | 8 | 8 | 8 | 8 | 8 | 8 | 8 | 8 | 8 | 8 | 8 | 8 | 8 | 8 | 8 | 8 | 8 | 8 | 8 | 8 | 8 |
| | Hex | | 0 8 | 0 8 | 0 8 | 0 8 | 0 8 | 0 8 | 0 8 | 0 8 | 0 8 | 0 8 | 0 8 | 0 8 | 0 8 | 0 8 | 0 8 | 0 8 | 0 8 | 0 8 | 0 8 | 0 8 | 0 8 | 0 8 | 0 8 | 0 8 | 0 8 | 0 8 | 0 8 | 0 8 | 0 8 | 0 8 | 0 8 | 0 8 | 0 8 | 0 8 | 0 8 | 0 8 | 0 8 | 0 8 | 0 8 | 0 8 | 0 8 | 0 8 | 0 8 | 0 8 | 0 8 | 0 8 |
| Bit | Byte_3 | Description | | | | | | | | | | | | | | | | | | | | | | | | | | | | | | | | | | | | | | | | | | | | | | | | |
| 7 | CFA0 | Comb filter On/Off | 1 | 1 | 1 | 1 | 1 | 0 | 0 | 0 | 1 | 1 | 1 | 1 | 1 | 1 | 1 | 1 | 1 | 1 | 1 | 0 | 0 | 0 | 0 | 0 | 0 | 0 | 0 | 0 | 1 | 1 | 1 | 1 | 1 | 1 | 1 | 0 | 0 | 0 | 0 | 0 | 0 | 0 | 0 | 1 | 1 | 0 | 0 | 0 | 0 |
| 6 | Reserved | | 0 | 0 | 0 | 0 | 0 | 0 | 0 | 0 | 0 | 0 | 0 | 0 | 0 | 0 | 0 | 0 | 0 | 0 | 0 | 0 | 0 | 0 | 0 | 0 | 0 | 0 | 0 | 0 | 0 | 0 | 0 | 0 | 0 | 0 | 0 | 0 | 0 | 0 | 0 | 0 | 0 | 0 | 0 | 0 | 0 | 0 | 0 | 0 | 0 |
| 5 | BLS | Blue stretch mode | 0 | 0 | 0 | 0 | 0 | 0 | 0 | 0 | 0 | 0 | 0 | 0 | 0 | 0 | 0 | 0 | 0 | 0 | 0 | 0 | 0 | 0 | 0 | 0 | 0 | 0 | 0 | 0 | 0 | 0 | 0 | 0 | 0 | 0 | 0 | 0 | 0 | 0 | 0 | 0 | 0 | 0 | 0 | 0 | 0 | 0 | 0 | 0 | 0 |
| 4 | LNA Last Status | | 0 | 0 | 0 | 0 | 0 | 0 | 0 | 0 | 0 | 0 | 0 | 0 | 0 | 0 | 0 | 0 | 0 | 0 | 0 | 0 | 0 | 0 | 0 | 0 | 0 | 0 | 0 | 0 | 0 | 0 | 0 | 0 | 0 | 0 | 0 | 0 | 0 | 0 | 0 | 0 | 0 | 0 | 0 | 0 | 0 | 0 | 0 | 0 | 0 |
| 3 | Hotel KBD Lock | Keyboard locked | 0 | 0 | 0 | 0 | 0 | 0 | 0 | 0 | 0 | 0 | 0 | 0 | 0 | 0 | 0 | 0 | 0 | 0 | 0 | 0 | 0 | 0 | 0 | 0 | 0 | 0 | 0 | 0 | 0 | 0 | 0 | 0 | 0 | 0 | 0 | 0 | 0 | 0 | 0 | 0 | 0 | 0 | 0 | 0 | 0 | 0 | 0 | 0 | 0 |
| 2 | Hotel Mode | TV in Hotel mode | 0 | 0 | 0 | 0 | 0 | 0 | 0 | 0 | 0 | 0 | 0 | 0 | 0 | 0 | 0 | 0 | 0 | 0 | 0 | 0 | 0 | 0 | 0 | 0 | 0 | 0 | 0 | 0 | 0 | 0 | 0 | 0 | 0 | 0 | 0 | 0 | 0 | 0 | 0 | 0 | 0 | 0 | 0 | 0 | 0 | 0 | 0 | 0 | 0 |
| 1 | Wake Up Mode | | 0 | 0 | 0 | 0 | 0 | 0 | 0 | 0 | 0 | 0 | 0 | 0 | 0 | 0 | 0 | 0 | 0 | 0 | 0 | 0 | 0 | 0 | 0 | 0 | 0 | 0 | 0 | 0 | 0 | 0 | 0 | 0 | 0 | 0 | 0 | 0 | 0 | 0 | 0 | 0 | 0 | 0 | 0 | 0 | 0 | 0 | 0 | 0 | 0 |
| 0 | Radio/TV Mode | Radio mode or TV mode | 0 | 0 | 0 | 0 | 0 | 0 | 0 | 0 | 0 | 0 | 0 | 0 | 0 | 0 | 0 | 0 | 0 | 0 | 0 | 0 | 0 | 0 | 0 | 0 | 0 | 0 | 0 | 0 | 0 | 0 | 0 | 0 | 0 | 0 | 0 | 0 | 0 | 0 | 0 | 0 | 0 | 0 | 0 | 0 | 0 | 0 | 0 | 0 | 0 |
| | Decimal | | 1 2 8 | 1 2 8 | 1 2 8 | 1 2 8 | 1 2 8 | 0 | 0 | 0 | 1 2 8 | 1 2 8 | 1 2 8 | 1 2 8 | 1 2 8 | 1 2 8 | 1 2 8 | 1 2 8 | 1 2 8 | 1 2 8 | 1 2 8 | 0 | 0 | 0 | 0 | 0 | 0 | 0 | 0 | 0 | 1 2 8 | 1 2 8 | 1 2 8 | 1 2 8 | 1 2 8 | 1 2 8 | 1 2 8 | 0 | 0 | 0 | 0 | 0 | 0 | 0 | 1 2 8 | 1 2 8 | 0 | 0 | 0 | 0 |
| | Hex | | 8 0 | 8 0 | 8 0 | 8 0 | 8 0 | 0 0 | 0 0 | 0 0 | 8 0 | 8 0 | 8 0 | 8 0 | 8 0 | 8 0 | 8 0 | 8 0 | 8 0 | 8 0 | 8 0 | 0 0 | 0 0 | 0 0 | 0 0 | 0 0 | 0 0 | 0 0 | 0 0 | 0 0 | 8 0 | 8 0 | 8 0 | 8 0 | 8 0 | 8 0 | 8 0 | 0 0 | 0 0 | 0 0 | 0 0 | 0 0 | 0 0 | 0 0 | 0 8 | 0 0 | 0 0 | 0 0 | 0 0 | 0 0 |
| Bit | Byte_4 | Description | | | | | | | | | | | | | | | | | | | | | | | | | | | | | | | | | | | | | | | | | | | | | | | | |
| 7 | PIP QSS | PIP QSS | 0 | 0 | 0 | 0 | 0 | 0 | 0 | 0 | 0 | 0 | 0 | 0 | 0 | 0 | 0 | 0 | 0 | 0 | 0 | 0 | 0 | 0 | 0 | 1 | 1 | 1 | 0 | 0 | 0 | 0 | 0 | 0 | 0 | 0 | 0 | 0 | 0 | 0 | 0 | 1 | 1 | 1 | 0 | 0 | 0 | 0 | 1 | 1 |
| 6 | CRA0 | Coring on SVM | 0 | 0 | 0 | 0 | 0 | 0 | 0 | 0 | 0 | 0 | 0 | 0 | 0 | 0 | 0 | 0 | 0 | 0 | 0 | 0 | 0 | 0 | 0 | 0 | 0 | 0 | 0 | 0 | 0 | 0 | 0 | 0 | 0 | 0 | 0 | 0 | 0 | 0 | 0 | 0 | 0 | 0 | 0 | 0 | 0 | 0 | 0 | 0 | 0 |
| 5 | BSD | Black Stretch Depth | 0 | 0 | 0 | 0 | 0 | 0 | 0 | 0 | 0 | 0 | 0 | 0 | 0 | 0 | 0 | 0 | 0 | 0 | 0 | 0 | 0 | 0 | 0 | 0 | 0 | 0 | 0 | 0 | 0 | 0 | 0 | 0 | 0 | 0 | 0 | 0 | 0 | 0 | 0 | 0 | 0 | 0 | 0 | 0 | 0 | 0 | 0 | 0 | 0 |
| 4 | BKS | Black Stretch Mode | 0 | 0 | 0 | 0 | 0 | 0 | 0 | 0 | 0 | 0 | 0 | 0 | 0 | 0 | 0 | 0 | 0 | 0 | 0 | 0 | 0 | 0 | 0 | 0 | 0 | 0 | 0 | 0 | 0 | 0 | 0 | 0 | 0 | 0 | 0 | 0 | 0 | 0 | 0 | 0 | 0 | 0 | 0 | 0 | 0 | 0 | 0 | 0 | 0 |
| 3 | SCRSAVER Mode | Screen saver mode | 0 | 0 | 0 | 0 | 0 | 0 | 0 | 0 | 0 | 0 | 0 | 0 | 0 | 0 | 0 | 0 | 0 | 0 | 0 | 0 | 0 | 0 | 0 | 0 | 0 | 0 | 0 | 0 | 0 | 0 | 0 | 0 | 0 | 0 | 0 | 0 | 0 | 0 | 0 | 0 | 0 | 0 | 0 | 0 | 0 | 0 | 0 | 0 | 0 |
| 2 | DVD Tray Lock | Lock/Unlock DVD tray | 0 | 0 | 0 | 0 | 0 | 0 | 0 | 0 | 0 | 0 | 0 | 0 | 0 | 0 | 0 | 0 | 0 | 0 | 0 | 0 | 0 | 0 | 0 | 0 | 0 | 0 | 0 | 0 | 0 | 0 | 0 | 0 | 0 | 0 | 0 | 0 | 0 | 0 | 0 | 0 | 0 | 0 | 0 | 0 | 0 | 0 | 0 | 0 | 0 |
| 1 | LPG | | 0 | 0 | 0 | 0 | 0 | 0 | 0 | 0 | 0 | 0 | 0 | 0 | 0 | 0 | 0 | 0 | 0 | 0 | 0 | 0 | 0 | 0 | 0 | 0 | 0 | 0 | 0 | 0 | 0 | 0 | 0 | 0 | 0 | 0 | 0 | 0 | 0 | 0 | 0 | 0 | 0 | 0 | 0 | 0 | 0 | 0 | 0 | 0 | 0 |
| 0 | Signal Strength | Signal Strength Switch in MK2 | 0 | 0 | 0 | 0 | 0 | 0 | 0 | 0 | 0 | 0 | 0 | 0 | 0 | 0 | 0 | 0 | 0 | 0 | 0 | 0 | 0 | 0 | 0 | 0 | 0 | 0 | 0 | 0 | 0 | 0 | 0 | 0 | 0 | 0 | 0 | 0 | 0 | 0 | 0 | 0 | 0 | 0 | 0 | 0 | 0 | 0 | 0 | 0 | 0 |
| | Decimal | | 0 | 0 | 0 | 0 | 0 | 0 | 0 | 0 | 0 | 0 | 0 | 0 | 0 | 0 | 0 | 0 | 0 | 0 | 0 | 0 | 0 | 0 | 0 | 1 2 8 | 1 2 8 | 1 2 8 | 0 | 0 | 0 | 0 | 0 | 0 | 0 | 0 | 0 | 0 | 0 | 0 | 0 | 0 | 1 2 8 | 1 2 8 | 1 2 8 | 0 | 0 | 0 | 0 | 1 2 8 | 1 2 8 |
| | Hex | | 0 0 | 0 0 | 0 0 | 0 0 | 0 0 | 0 0 | 0 0 | 0 0 | 0 0 | 0 0 | 0 0 | 0 0 | 0 0 | 0 0 | 0 0 | 0 0 | 0 0 | 0 0 | 0 0 | 0 0 | 0 0 | 0 0 | 0 0 | 8 0 | 8 0 | 8 0 | 0 0 | 0 0 | 0 0 | 0 0 | 0 0 | 0 0 | 0 0 | 0 0 | 0 0 | 0 0 | 0 0 | 0 0 | 0 0 | 8 0 | 8 0 | 8 0 | 0 0 | 0 0 | 0 0 | 0 0 | 8 0 | 8 0 |
| Bit | Byte_5 | Description | | | | | | | | | | | | | | | | | | | | | | | | | | | | | | | | | | | | | | | | | | | | | | | |
| 7 | DSK | Dynamic Skin Control | 0 | 0 | 0 | 0 | 0 | 0 | 0 | 0 | 0 | 0 | 0 | 0 | 0 | 0 | 0 | 0 | 0 | 0 | 0 | 0 | 0 | 0 | 0 | 0 | 0 | 0 | 0 | 0 | 0 | 0 | 0 | 0 | 0 | 0 | 0 | 0 | 0 | 0 | 0 | 0 | 0 | 0 | 0 | 0 | 0 | 0 | 0 | 0 | 0 |
| 6 | DSA | Dynamic skin tone angle | 0 | 0 | 0 | 0 | 0 | 0 | 0 | 0 | 0 | 0 | 0 | 0 | 0 | 0 | 0 | 0 | 0 | 0 | 0 | 0 | 0 | 0 | 0 | 0 | 0 | 0 | 0 | 0 | 0 | 0 | 0 | 0 | 0 | 0 | 0 | 0 | 0 | 0 | 0 | 0 | 0 | 0 | 0 | 0 | 0 | 0 | 0 | 0 | 0 |
| 5 | LLB | Low level of beam current limiter | 0 | 0 | 0 | 0 | 0 | 0 | 0 | 0 | 0 | 0 | 0 | 0 | 0 | 0 | 0 | 0 | 0 | 0 | 0 | 0 | 0 | 0 | 0 | 0 | 0 | 0 | 0 | 0 | 0 | 0 | 0 | 0 | 0 | 0 | 0 | 0 | 0 | 0 | 0 | 0 | 0 | 0 | 0 | 0 | 0 | 0 | 0 | 0 | 0 |
| 4 | CBS | Control sequence of beam current limiting | 0 | 0 | 0 | 0 | 0 | 0 | 0 | 0 | 0 | 0 | 0 | 0 | 0 | 0 | 0 | 0 | 0 | 0 | 0 | 0 | 0 | 0 | 0 | 0 | 0 | 0 | 0 | 0 | 0 | 0 | 0 | 0 | 0 | 0 | 0 | 0 | 0 | 0 | 0 | 0 | 0 | 0 | 0 | 0 | 0 | 0 | 0 | 0 | 0 |
| 3 | GAM | Gamma control | 0 | 0 | 0 | 0 | 0 | 0 | 0 | 0 | 0 | 0 | 0 | 0 | 0 | 0 | 0 | 0 | 0 | 0 | 0 | 0 | 0 | 0 | 0 | 0 | 0 | 0 | 0 | 0 | 0 | 0 | 0 | 0 | 0 | 0 | 0 | 0 | 0 | 0 | 0 | 0 | 0 | 0 | 0 | 0 | 0 | 0 | 0 | 0 | 0 |
| 2 | MUS | NTSC matrix | 1 | 1 | 1 | 1 | 1 | 1 | 1 | 1 | 1 | 1 | 1 | 1 | 1 | 1 | 1 | 1 | 1 | 1 | 1 | 1 | 1 | 1 | 1 | 1 | 1 | 1 | 1 | 1 | 1 | 1 | 1 | 1 | 1 | 1 | 1 | 1 | 1 | 1 | 1 | 1 | 1 | 1 | 1 | 1 | 1 | 1 | 1 | 1 | 1 |
| 1 | NRR | No red reduction during blue stretch | 1 | 1 | 1 | 1 | 1 | 1 | 1 | 1 | 1 | 1 | 1 | 1 | 1 | 1 | 1 | 1 | 1 | 1 | 1 | 1 | 1 | 1 | 1 | 1 | 1 | 1 | 1 | 1 | 1 | 1 | 1 | 1 | 1 | 1 | 1 | 1 | 1 | 1 | 1 | 1 | 1 | 1 | 1 | 1 | 1 | 1 | 1 | 1 | 1 |
| 0 | FFI | Fast Filter | 0 | 0 | 0 | 0 | 0 | 0 | 0 | 0 | 0 | 0 | 0 | 0 | 0 | 0 | 0 | 0 | 0 | 0 | 0 | 0 | 0 | 0 | 0 | 0 | 0 | 0 | 0 | 0 | 0 | 0 | 0 | 0 | 0 | 0 | 0 | 0 | 0 | 0 | 0 | 0 | 0 | 0 | 0 | 0 | 0 | 0 | 0 | 0 | 0 |
| | Decimal | | 6 | 6 | 6 | 6 | 6 | 6 | 6 | 6 | 6 | 6 | 6 | 6 | 6 | 6 | 6 | 6 | 6 | 6 | 6 | 6 | 6 | 6 | 6 | 6 | 6 | 6 | 6 | 6 | 6 | 6 | 6 | 6 | 6 | 6 | 6 | 6 | 6 | 6 | 6 | 6 | 6 | 6 | 6 | 6 | 6 | 6 | 6 | 6 | 6 |
| | Hex | | 0 6 | 0 6 | 0 6 | 0 6 | 0 6 | 0 6 | 0 6 | 0 6 | 0 6 | 0 6 | 0 6 | 0 6 | 0 6 | 0 6 | 0 6 | 0 6 | 0 6 | 0 6 | 0 6 | 0 6 | 0 6 | 0 6 | 0 6 | 0 6 | 0 6 | 0 6 | 0 6 | 0 6 | 0 6 | 0 6 | 0 6 | 0 6 | 0 6 | 0 6 | 0 6 | 0 6 | 0 6 | 0 6 | 0 6 | 0 6 | 0 6 | 0 6 | 0 6 | 0 6 | 0 6 | 0 6 | 0 6 | 0 6 |
| Bit | Byte_6 | Description | | | | | | | | | | | | | | | | | | | | | | | | | | | | | | | | | | | | | | | | | | | | | | | |
| 7 | Reserved | | 0 | 0 | 0 | 0 | 0 | 0 | 0 | 0 | 0 | 0 | 0 | 0 | 0 | 0 | 0 | 0 | 0 | 0 | 0 | 0 | 0 | 0 | 0 | 0 | 0 | 0 | 0 | 0 | 0 | 0 | 0 | 0 | 0 | 0 | 0 | 0 | 0 | 0 | 0 | 0 | 0 | 0 | 0 | 0 | 0 | 0 | 0 | 0 | 0 |
| 6 | Reserved | | 0 | 0 | 0 | 0 | 0 | 0 | 0 | 0 | 0 | 0 | 0 | 0 | 0 | 0 | 0 | 0 | 0 | 0 | 0 | 0 | 0 | 0 | 0 | 0 | 0 | 0 | 0 | 0 | 0 | 0 | 0 | 0 | 0 | 0 | 0 | 0 | 0 | 0 | 0 | 0 | 0 | 0 | 0 | 0 | 0 | 0 | 0 | 0 | 0 |
| 5 | Reserved | | 0 | 0 | 0 | 0 | 0 | 0 | 0 | 0 | 0 | 0 | 0 | 0 | 0 | 0 | 0 | 0 | 0 | 0 | 0 | 0 | 0 | 0 | 0 | 0 | 0 | 0 | 0 | 0 | 0 | 0 | 0 | 0 | 0 | 0 | 0 | 0 | 0 | 0 | 0 | 0 | 0 | 0 | 0 | 0 | 0 | 0 | 0 | 0 | 0 |
| 4 | Reserved | | 0 | 0 | 0 | 0 | 0 | 0 | 0 | 0 | 0 | 0 | 0 | 0 | 0 | 0 | 0 | 0 | 0 | 0 | 0 | 0 | 0 | 0 | 0 | 0 | 0 | 0 | 0 | 0 | 0 | 0 | 0 | 0 | 0 | 0 | 0 | 0 | 0 | 0 | 0 | 0 | 0 | 0 | 0 | 0 | 0 | 0 | 0 | 0 | 0 |
| 3 | Reserved | | 0 | 0 | 0 | 0 | 0 | 0 | 0 | 0 | 0 | 0 | 0 | 0 | 0 | 0 | 0 | 0 | 0 | 0 | 0 | 0 | 0 | 0 | 0 | 0 | 0 | 0 | 0 | 0 | 0 | 0 | 0 | 0 | 0 | 0 | 0 | 0 | 0 | 0 | 0 | 0 | 0 | 0 | 0 | 0 | 0 | 0 | 0 | 0 | 0 |
| 2 | Reserved | | 0 | 0 | 0 | 0 | 0 | 0 | 0 | 0 | 0 | 0 | 0 | 0 | 0 | 0 | 0 | 0 | 0 | 0 | 0 | 0 | 0 | 0 | 0 | 0 | 0 | 0 | 0 | 0 | 0 | 0 | 0 | 0 | 0 | 0 | 0 | 0 | 0 | 0 | 0 | 0 | 0 | 0 | 0 | 0 | 0 | 0 | 0 | 0 | 0 |
| 1 | Reserved | | 0 | 0 | 0 | 0 | 0 | 0 | 0 | 0 | 0 | 0 | 0 | 0 | 0 | 0 | 0 | 0 | 0 | 0 | 0 | 0 | 0 | 0 | 0 | 0 | 0 | 0 | 0 | 0 | 0 | 0 | 0 | 0 | 0 | 0 | 0 | 0 | 0 | 0 | 0 | 0 | 0 | 0 | 0 | 0 | 0 | 0 | 0 | 0 | 0 |
| 0 | LTI Status | LTI last status | 0 | 0 | 0 | 0 | 0 | 0 | 0 | 0 | 0 | 0 | 0 | 0 | 0 | 0 | 0 | 0 | 0 | 0 | 0 | 0 | 0 | 0 | 0 | 0 | 0 | 0 | 0 | 0 | 0 | 0 | 0 | 0 | 0 | 0 | 0 | 0 | 0 | 0 | 0 | 0 | 0 | 0 | 0 | 0 | 0 | 0 | 0 | 0 | 0 |
| | Decimal | | 0 | 0 | 0 | 0 | 0 | 0 | 0 | 0 | 0 | 0 | 0 | 0 | 0 | 0 | 0 | 0 | 0 | 0 | 0 | 0 | 0 | 0 | 0 | 0 | 0 | 0 | 0 | 0 | 0 | 0 | 0 | 0 | 0 | 0 | 0 | 0 | 0 | 0 | 0 | 0 | 0 | 0 | 0 | 0 | 0 | 0 | 0 | 0 | 0 |
| | Hex | | 0 0 | 0 0 | 0 0 | 0 0 | 0 0 | 0 0 | 0 0 | 0 0 | 0 0 | 0 0 | 0 0 | 0 0 | 0 0 | 0 0 | 0 0 | 0 0 | 0 0 | 0 0 | 0 0 | 0 0 | 0 0 | 0 0 | 0 0 | 0 0 | 0 0 | 0 0 | 0 0 | 0 0 | 0 0 | 0 0 | 0 0 | 0 0 | 0 0 | 0 0 | 0 0 | 0 0 | 0 0 | 0 0 | 0 0 | 0 0 | 0 0 | 0 0 | 0 0 | 0 0 | 0 0 | 0 0 | 0 0 | 0 0 |

- Option Byte 1 (OP1)
  - OB17: PHILIPS TUNER
  - OB16: FM RADIO
  - OB15: LNA
  - OB14: ATS (EU)
  - OB13: ACI
  - OB12: UK PNP
  - OB11: VIRGIN MODE
  - OB10: CHINA
- Option Byte 2 (OP2)
  - OB27: SC
  - OB26: GREEN UI
  - OB25: CHANNEL NAMING
  - OB24: LTI
  - OB23: TILT
  - OB22: FINE TUNING
  - OB21: PIP PHILIPS TUNER
  - OB20: HUE
- Option Byte 3 (OP3)
  - OB37: EW FUNCTION
  - OB36: 2 TUNER PIP
  - OB35: PIP SPLITTER
  - OB34: SPLITTER
  - OB33: VIRTUAL DOLBY
  - OB32: WIDE SCREEN
  - OB31: WSSB (EU)
  - OB30: ECO SUBWOOFER
- Option Byte 4 (OP4)
  - OB47: Reserved (value= 0)
  - OB46: Reserved (value= 0)
  - OB45: ULTRA BASS
  - OB44: DELTA VOLUME
  - OB43: Reserved (value= 0)
  - OB42: VOLUME LIMITER
  - OB41: Reserved (value= 0)
  - OB40: STEREO NICAM 2CS
- Option Byte 5 (OP5)
  - OB57: AV1
  - OB56: AV2
  - OB55: AV3
  - OB54: CVI
  - OB53: SVHS2
  - OB52: SVHS3
  - OB51: HOTEL MODE
  - OB50: Reserved (value= 0)
- Option Byte 6 (OP6)
  - OB67: PERSONAL ZAPPING
  - OB66: Reserved (value= 0)
  - OB65: FM TRAP
  - OB64: COMB FILTER
  - OB63: ACTIVE CONTROL
  - OB62: VIDEO TEXT
  - OB61: LIGHT SENSOR
  - OB60: DUAL TEXT
- Option Byte 7 (OP7)
  - OB77: TIME WIN1
  - OB76: Reserved (value= 0)
  - OB75: Reserved (value= 0)
  - OB74: Reserved (value= 0)
  - OB73: Reserved (value= 0)
  - OB72: Reserved (value= 0)
  - OB71: Reserved (value= 0)
  - OB70: Reserved (value= 0)

***Option bit definition***

*Option Byte 1 (OP1)*

- OB17: PHILIPS TUNER
  - 0 : ALPS / MASCO compatible tuner is in use.
  - 1 : Philips compatible tuner is in use.
- OB16: FM RADIO
  - 0 : FM radio feature is disabled or not applicable.
  - 1 : FM radio feature is enabled.
- OB15: LNA
  - 0 : Auto Picture Booster is not available or not applicable.
  - 1 : Auto Picture Booster is available.
- OB14: ATS
  - 0 : Automatic Tuning System (ATS) feature is disabled or not applicable.
  - 1 : ATS feature is enabled. When ATS is enabled, it sorts the program in an ascending order starting from program “1”.
- OB13: ACI
  - 0 : Automatic Channel Installation (ACI) feature is disabled or not applicable.
  - 1 : ACI feature is enabled.
- OB12: UK PNP
  - 0 : UK's default Plug and Play setting is not available or not applicable.
  - 1 : UK's default Plug and Play setting is available.
  - When UK PNP and VIRGIN MODE are set to “1” at the initial setup and after exiting from menu, VIRGIN MODE will be set automatically to “0” while UK PNP remains “1”.
- OB11: VIRGIN MODE
  - 0 : Virgin mode is disabled or not applicable.
  - 1 : Virgin mode is enabled. Plug and Play menu item will be displayed to perform installation at the initial startup of the TV when VIRGIN MODE is set to “1”. After installation is finished, this option bit will be automatically set to “0”.
- OB10: CHINA
  - 0 : Tuning is not for China set, or this option bit is not applicable.
  - 1 : Tuning is for China set.

*Option Byte 2 (OP2)*

- OB27: SC
  - 0 : Soft clipping is disabled.
  - 1 : Soft clipping is enabled.
- OB26: GREEN UI
  - 0 : Green UI is disabled (for Philips brand).
  - 1 : Green UI is enabled (for Magnavox brand).
  - Note: only for NAFTA region.
- OB25: CHANNEL NAMING
  - 0 : Name FM Channel is disabled or not applicable.
  - 1 : Name FM Channel is enabled.
  - Note : Name FM channel can be enabled only when FM RADIO= “1”.
- OB24: LTI
  - 0 : Luminance Transient Improvement (LTI) is disabled or not applicable.
  - 1 : LTI is enabled.
- OB23: TILT
  - 0 : Rotate Picture is disabled or not applicable.
  - 1 : Rotate Picture is enabled.
- OB22: FINE TUNING
  - 0 : Fine Tuning for Channel Offset is disabled or not applicable.
  - 1 : Fine Tuning for Channel Offset is enabled.
- OB21: PIP PHILIPS TUNER
  - 0 : ALPS / MASCO compatible tuner is in use for PIP module.
  - 1 : Philips compatible tuner is in use for PIP module.
- OB20: HUE
  - 0 : Hue/Tint Level is disabled or not applicable.
  - 1 : Hue/Tint Level is enabled.

*Option Byte 3 (OP3)*

- OB37: EW FUNCTION
  - 0 : EW function is disabled. In this case, only Expand 4:3 is allowed, Compress 16:9 is not applicable.
  - 1 : EW function is enabled. In this case, both Expand 4:3 and Compress 16:9 are applicable.
- OB36: 2 TUNER PIP
  - 0 : Software selection no PIP
  - 1 : Software selection with PIP

  - Note: Only for EU/AP region for sets with PIP.
- OB35: PIP SPLITTER
  - 0 : Normal Tuner in PIP
  - 1 : Splitter in PIP
  - Note: Only for EU/AP region. For PIP sets and build in with Splitter in PIP tuner.
- OB34: SPLITTER
  - 0 : Normal Tuner for main chassis
  - 1 : Splitter Tuner for main chassis
  - Note: Only for EU/AP region.
- OB33: VIRTUAL DOLBY
  - 0 : Virtual Dolby is not applicable.
  - 1 : Virtual Dolby is applicable.
- OB32: WIDE SCREEN
  - 0 : Software is used for 4:3 sets or not applicable.
  - 1 : Software is used for 16:9 sets.
- OB31: WSSB (EU)
  - 0 : WSSB is disabled or not applicable.
  - 1 : WSSB is enabled.
  - Note : This option bit can be set to “1” only when WIDE SCREEN= “1”.
- OB30: ECO SUBWOOFER
  - 0 : Feature is disabled or not applicable.
  - 1 : Feature is enabled.

*Option Byte 4 (OP4)*
- OB47: Reserved
  - Default setting is “0”.
- OB46: Reserved
  - Default setting is “0”.
- OB45: ULTRA BASS
  - 0 : Ultra Bass is disabled or not applicable.
  - 1 : Ultra Bass is enabled.
  - Default setting is “0”.
- OB44: DELTA VOLUME
  - 0 : Delta Volume Level is disabled or not applicable.
  - 1 : Delta Volume Level is enabled.
- OB43: Reserved
  - Default setting is “0”.
- OB42: VOLUME LIMITER
  - 0 : Volume Limiter Level is disabled or not applicable.
  - 1 : Toggle Volume Limiter Level is enabled.
- OB41: Reserved
  - Default setting is “0”.
- OB40: STEREO NICAM 2CS
  - 0 : For AV Stereo.
  - 1 : For NICAM Stereo 2CS.

*Option Byte 5 (OP5)*
- OB57: AV1
  - 0 : AV1 source is not present.
  - 1 : AV1 source is present.
- OB56: AV2
  - 0 : AV2 source is not present.
  - 1 : AV2 source is present.
  - Note : For EU, when AV2=“1”, both EXT2 and SVHS2 should be included in the OSD loop.
- OB55: AV3
  - 0 : Side/Front AV3 source is not present.
  - 1 : Side/Front AV3 source is present.
- OB54: CVI
  - 0 : CVI source is not available.
  - 1 : CVI source is available.
- OB53: SVHS2
  - 0 : SVHS2 source is not available.
  - 1 : SVHS2 source is available.
  - Note : This option bit is not applicable for EU.
- OB52: SVHS3
  - 0 : SVHS3 source is not available.
  - 1 : SVHS3 source is available.
  - Note : This option bit is not applicable for EU.
- OB51: HOTEL MODE
  - 0 : Hotel mode is disabled or not applicable.
  - 1 : Hotel mode is enabled.
- OB50: Reserved
  - Default setting is “0”.

*Option Byte 6 (OP6)*
- OB67: PERSONAL ZAPPING
  - 0 : Personal Zapping feature is disabled or not applicable.
  - 1 : Personal Zapping feature is enabled.
- OB66: Reserved
  - Default setting is “0”.
- OB65: FM TRAP
  - 0 : FM Trap is not present.
  - 1 : FM Trap is present.
  - Note: Only for LATAM region.
- OB64: COMBFILTER
  - 0 : 3D-combfilter is not present.
  - 1 : 3D-combfilter is present.
- OB63: ACTIVE CONTROL
  - 0 : Active Control feature is disabled or not applicable.
  - 1 : Active Control feature is enabled.
- OB62: VIDEO TEXT
  - 0 : Video Text (DW with TXT) is disabled or not applicable.
  - 1 : Video Text (DW with TXT) is enabled.
  - Note: For EU only.
- OB61: LIGHT SENSOR
  - 0 : Light sensor feature is disabled or not applicable.
  - 1 : Light sensor feature is enabled.
- OB60: DUAL TEXT
  - 0 : Dual Text and Text Dual Screen are disabled or not applicable.
  - 1: Dual Text and Text Dual Screen are enabled.

*Option Byte 7 (OP7)*
- OB77: TIME WIN1
  - 00 : The time window is set to 1.2 s.
  - 01 : The time window is set to 2 s.
  - Note :The time-out for all digit entries depends on this setting.
- OB76: Reserved
  - Default setting is “0”.
- OB75: Reserved
  - Default setting is “0”.
- OB74: Reserved
  - Default setting is “0”.
- OB73: Reserved
  - Default setting is “0”.
- OB72 Reserved
  - Default setting is “0”.
- OB71 Reserved
  - Default setting is “0”.
- OB70: Reserved
  - Default setting is “0”.

### 8.3.2 Tuner

**Note:** Described alignments are only necessary when the NVM (item 7601) is replaced.

***IF PLL***

This adjustment is auto-aligned. Therefore, no action is required.

***AGC (AGC take over point)***

1. Set the external pattern generator to a colour bar video signal and connect the RF output to aerial input. Set amplitude to 10 mV and set frequency to 475 MHz.
2. Connect a DC multimeter to pin 1 of the tuner (item 1000 on the main panel).
3. Activate the SAM.
4. Go to the TUNER sub menu.
5. Select AGC with the UP/DOWN cursor keys.

6. Adjust the AGC-value with the LEFT/ RIGHT cursor keys until the voltage at pin 1 of the tuner lies between 3.8 and 2.3 V (default value is “20”).
7. Switch the set to STANDBY, in order to store the alignments.

***CL (Cathode drive level)***
Always set to “5”.

### 8.3.3 White Tone

In the WHITE TONE sub menu, the values of the black cut off level can be adjusted. Normally, no alignment is needed, and you can use the given default values.
The colour temperature mode (NORMAL, COOL and WARM) and the colour (R, G, and B) can be selected with the UP/ DOWN RIGHT/LEFT cursor keys. The value can be changed with the LEFT/RIGHT cursor keys. First, select the values for the NORMAL colour temperature. Then select the values for the COOL and WARM mode. After alignment, switch the set to STANDBY, in order to store the alignments.

Default settings:
- NORMAL:
  - NORMAL R= “26”
  - NORMAL G= “32”
  - NORMAL B= “27”
- COOL:
  - DELTA COOL R= “-3”
  - DELTA COOL G= “0”
  - DELTA COOL B= “5”
- WARM:
  - DELTA WARM R= “2”
  - DELTA WARM G= “0”
  - DELTA WARM B= “-6”

### 8.3.4 Geometry

The geometry alignments menu contains several items to align the set, in order to obtain correct picture geometry.

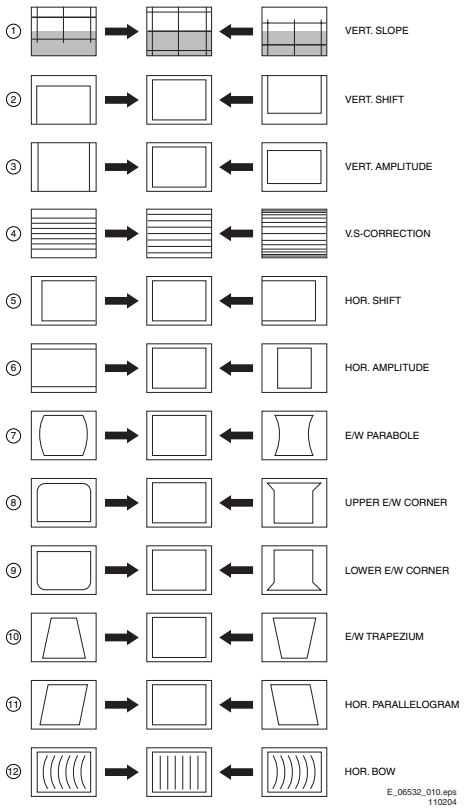


**Figure 8-4 Geometry alignments**

1. Connect an external video pattern generator to the aerial input of the TV-set and input a crosshatch test pattern. Set the generator amplitude to at least 1 mV and set frequency to 475 MHz.
2. Set 'Smart Picture' to NATURAL (or MOVIES).
3. Activate the SAM menu (see chapter 5 “Service Modes, ...”).
4. Go to the GEOMETRY sub menu.
5. Choose HORIZONTAL or VERTICAL alignment.

Now the following alignments can be performed:

***Horizontal***
- **Horizontal Parallelogram (HP).** Align straight vertical lines in the top and the bottom; vertical rotation around the centre.
- **Horizontal Bow (HB).** Align straight horizontal lines in the top and the bottom; horizontal rotation around the centre.
- **Horizontal Shift (HSH).** Align the horizontal centre of the picture to the horizontal centre of the CRT.
- **East West Width (EWW).** Align the picture width until the complete test pattern is visible.
- **East West Parabola (EWP).** Align straight vertical lines at the sides of the screen.
- **Upper Corner Parabola (UCP).** Align straight vertical lines in the upper corners of the screen.
- **Lower Corner Parabola (LCP).** Align straight vertical lines in the lower corners of the screen.
- **East West Trapezium (EWT).** Align straight vertical lines in the middle of the screen.
- **H60 (Delta HSH for 60Hz, if present).** Align straight horizontal lines if NTSC system is used (60 Hz) i.s.o. PAL (50 Hz). Default value is “9”.

***Vertical***
- **Service blanking (SBL).** Switch the blanking of the lower half of the screen “on” or “off” (to be used in combination with the vertical slope alignment).
- **Vertical Shift (VSH).** Align the vertical centring so that the test pattern is located vertically in the middle. Repeat the 'vertical amplitude' alignment if necessary.
- **Vertical slope (VS).** Align the vertical centre of the picture to the vertical centre of the CRT. This is the first of the vertical alignments to perform. For an easy alignment, set SBL to “on”.
- **Vertical Amplitude (VAM).** Align the vertical amplitude so that the complete test pattern is visible.
- **Vertical S-Correction (VSC).** Align the vertical linearity, meaning that vertical intervals of a grid pattern must be equal over the entire screen height.
- **Vertical Zoom (VX, if present).** The vertical zoom is added in for the purpose of development. It helps the designer to set proper values for the movie expand or movie (16x9) compress. Default value is “25”.
- **V60 (Delta VAM for 60Hz, if present).** Align straight vertical lines if NTSC system (60 Hz) is used i.s.o. PAL (50 Hz). Default value is “-2”.

In the next table, you will find the GEOMETRY default values for the different sets.

**Table 8-3 Default geometry values**

| Alignment | Default values (hex) | Default values (dec) |
|---|---|---|
| HP (Horizontal parallelogram) | 1F | 31 |
| HB (Horizontal Bow) | 1F | 31 |
| HS (Horizontal shift) | 1A | 26 |
| EWW (EW width) | 25 | 37 |
| EWP (EW parabola width) | 0A | 10 |
| EWT (EW trapezium) | 1A | 26 |
| UCP (EW upper corner parabola) | 1E | 30 |
| LCP (EW lower corner parabola) | 28 | 40 |
| VSH (Vertical Shift) | 1A | 26 |
| VS (Vertical slope) | 25 | 37 |
| VAM (Vertical amplitude) | 1E | 30 |
| VSC (Vertical S-Correction) | 19 | 25 |

### 8.3.5 Audio

No alignments are needed for the audio sub menu. Use the given default values.

***QSS (Quasi Split Sound)***
- For NICAM/2CS sound system (EU/AP, except for APNTSC), set to “On”.
- For AV-Stereo sound system (sets without NICAM), set to “On”.
- For all other sets (NAFTA/LATAM/AP-NTSC), set to “Off”.

***FMI (Freq. Modulation Intercarrier)***
- For NICAM/2CS sound system (EU/AP, except for APNTSC), set to “On”.
- For AV-Stereo sound system (sets without NICAM), set to “Off”.
- For dBx/non-dBx sound systems, set to “On”.

***NICAM Alignment***
- For sets with NICAM/2CS (EU/AP, except for AP-NTSC) sound system, set to “79”.
- For all other sets (NAFTA/LATAM/AP-NTSC), set to “63” (= don’t care).

# 9. Circuit Descriptions, List of Abbreviations, and IC Data Sheets

Index of this chapter:
1. Introduction
2. Power Supply
3. Deflection
4. Control
5. Tuner and IF
6. Source Selection
7. Video Processing
8. Audio Processing
9. Picture in Picture (PIP)
10. Abbreviations
11. IC Data Sheets

**Notes:**
- Only **new** (not recently published) circuits are described in this chapter. For the other circuit descriptions, see the L01.1/M8 Service Manual.
- The descriptions below are a copy from the L04U manual, therefore sometimes a reference is made to region specific terminology or chassis (like the M8). Only the PIP description is new.
- Figures can deviate slightly from the actual situation, due to different set executions.
- For a good understanding of the following circuit descriptions, please use the diagrams in sections “Block Diagrams, ...”, and/or “Electrical Diagrams”. Where necessary, you will find a separate drawing for clarification.

## 9.1 Introduction

The "L04" chassis is a global TV chassis for the model year 2004 and is used for TV sets with large screen sizes (from 21 to 36 inch), in Super Flat and Real Flat executions (both in 4:3 and 16:9 variants).
There are three types of CRT namely the 100 degrees, 110 degrees and Wide Screen CRT.
- **The 100 deg. 4:3 CRT** is raster-correction-free and does not need East/West Correction (except when used in AP regions), therefore the corrections needed are Horizontal Shift, Vertical Slope, Vertical Amplitude, Vertical S-Correction, Vertical Shift, and Vertical Zoom for geometry corrections.
- **The 110 deg. 4:3 CRT** comes with East/West Correction. In addition to the parameter mentioned above, it also needs the Horizontal Parallelogram, Horizontal Bow, Horizontal Shift, East/West Width, East/West Parabola, East/West Upper and Lower Corners, and East/West Trapezium correction.
- **The Wide Screen TV sets** have all the correction of the 110 deg. 4:3 CRTs and also have additional picture format like the 4:3 format, 16:9, 14:9, 16:9 zoom, subtitle zoom, and the Super-Wide picture format.

In comparison to its predecessor (the L01.1/M8), this chassis is has the following (new) features:
- **Audio:** The sound processor is part of the UOC processor (called “Hercules”).
- **Video:** Enhanced video features, video drivers, and Active Control.
- **Control:** Comparable to L01.1/M8 (e.g. Dual clock, I/O mapping, I/O switching).
- **Power Supply:** Adapted to supply the Hercules IC, and to enable 0.5 W Standby power dissipation. Also provisions are made for future extensions like DVD and iDTV.

The standard architecture consists of a Main panel (called "family board"), a Picture Tube panel, a Side I/O panel, and a Top Control panel. The Main panel consists primarily of conventional components with some surface mounted devices in the audio and video processing part.

The functions for video/audio processing, microprocessor (P), and CC/Teletext (TXT) decoder are all combined in one IC (TDA1200x, item 7200), the so-called third generation Ultimate One Chip (UOC-III) or “Hercules”. This chip is mounted on the “solder” side of the main panel, and has the following features:
- Control, small signal, mono/stereo, and extensive Audio/ Video switching in one IC.
- Upgrade with digital sound & video processing.
- Alignment free IF, including SECAM-L/L1 and AM.
- FM sound 4.5/5.5/6.0/6.5, no traps/bandpass filters.
- Full multi-standard color decoder.
- One Xtal reference for all functions (microprocessor, RCP, TXT/CC, RDS, color decoder, and stereo sound processor).

The tuning system features 181 channels with on-screen display. The main tuning system uses a tuner, a microcomputer, and a memory IC mounted on the main panel. The microcomputer communicates with the memory IC, the customer keyboard, remote receiver, tuner, signal processor IC and the audio output IC via the I2C bus. The memory IC retains the settings for favorite stations, customer-preferred settings, and service / factory data.
The on-screen graphics and closed caption decoding are done within the microprocessor where they are added to the main signal.

The chassis uses a Switching Mode Power Supply (SMPS) for the main voltage source. The chassis has a 'hot' ground reference on the primary side and a cold ground reference on the secondary side of the power supply and the rest of the chassis.

## 9.2 Power Supply

### 9.2.1 Block Diagram

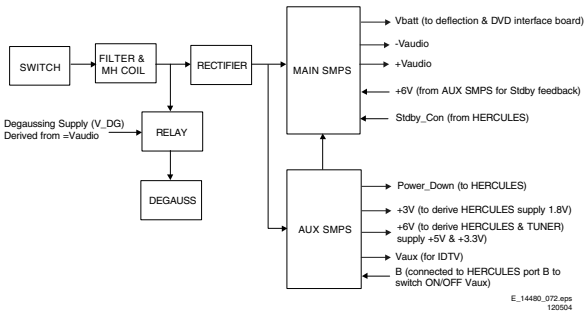


**Figure 9-1 Block diagram power supply**

***Stdby_con signal***
The Hercules generates this signal. This line is logic “low” (0 V) under normal operation and in semi-Standby of the TV, and is “high” (3.3 V) during Standby.

***Power_down signal***
The AUX SMPS generates this signal. It is logic “high” (3 .3 V) under normal operation of the TV and goes “low” (0 V) when the AC power (or Mains) input voltage supply goes below 70 V_ac.

***B (Hercules port)***
This port is used to switch the AUX SMPS output V_aux “On/ Off”. This is required for DVD and iDTV (for future extensions).

### 9.2.2 Timing Diagrams

***Power ON - To Standby - Out of Standby - Power OFF***

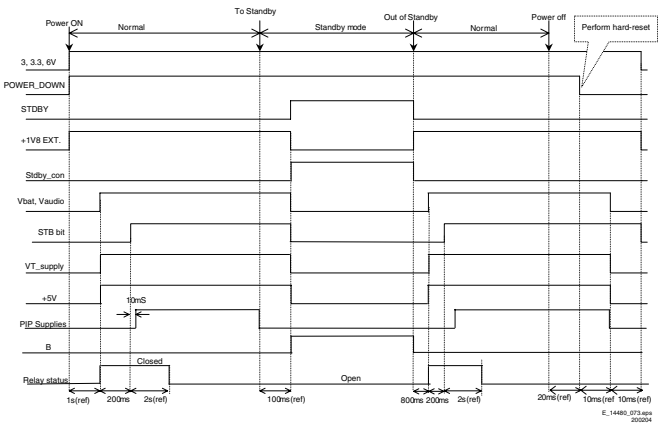


**Figure 9-2 Timing diagram Standby**

***Power ON - To Semi Standby - Out of Semi Standby - Power OFF***

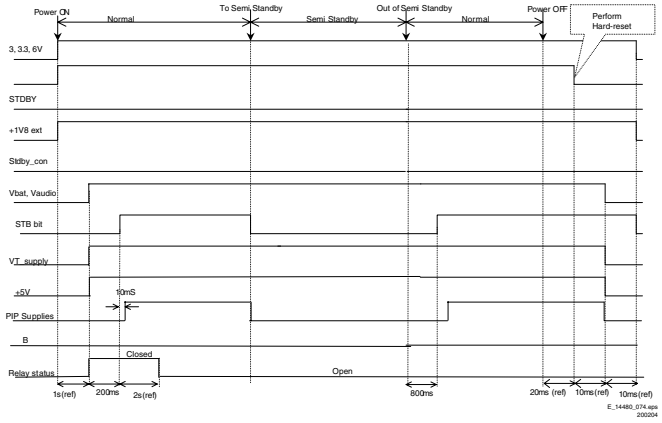


**Figure 9-3 Timing diagram Semi Standby**

### 9.2.3 Startup Sequence

When the set is connected to the AC power, the rectified line voltage (via winding 4-5 of L5531 connected to pin 14 of IC7531) will start the internal voltage source to charge the V_cc capacitor (C2532). The IC starts to switch as soon as the V_cc reaches the V_cc start level of 9.5 V. This supply is automatically taken over by winding 1-2, as soon as the V_cc is high enough, and the internal supply source will stop (for high efficiency switching).

**Table 9-1 Pinning overview TEA1523**

| Pin | Symbol | Description |
|---|---|---|
| 2 | Gnd | This pin is Ground of the IC. |
| 3 | V_cc | This pin is connected to the supply voltage. An internal current charges the V_cc capacitor (2532), and the start-up sequence is initiated when this voltage reaches a level of 9.5 V. Note: The output power is disabled when the voltage gets below 9 V (UVLO). Operating range is between 0 to 40 V. |
| 5 | RC | Frequency setting |
| 6 | REG | This pin is connected to the feedback loop. The pin contains two functions: 1) Between 1 to 1.425 V it controls the "on" time. 2) Above the threshold of 3.5 V, it is possible to initiate "burst mode" standby. |
| 11 | Demag | This pin is connected to the V_cc winding of 5531. It has three functions: 1) During Magnetisation, the input voltage is sensed to compensate OCP level for OPP. 2) During demagnetisation, the output voltage is sensed for OVP and 3) A comparator is used to prevent continuous conduction when output is overloaded. |
| 12 | Sense | This pin contains three different functions.: 1) Dectection of soft start, protection levels of 2) OCP, and 3) SWP. |
| 14 | Drain | This pin is connected to the drain of the switch or center tap of the transformer. It contains three functions: 1) M-level (mains-dependent operation-enabling level), 2) Supply for start-up current, and 3) Valley detection. |

As C2532 of IC7531 is charged, it will also start to charge the V_cc capacitor (C2511) of IC7511. Via resistor R3519 and C2511, the TEA1506 starts to switch as soon as the V_cc voltage reaches the V_cc start level of is about 11 V. The V_cc voltage is automatically taken over by the main transformer L5512 (winding 2-3) when the V_cc is high enough (when this voltage is even higher than the voltage on C2511, there is no current flow from C2532 to C2511 due to diode D6512).

**Table 9-2 Pinning overview TEA1506**

| Pin | Symbol | Description |
|---|---|---|
| 2 | Vcc | This pin is connected to the supply voltage. When this voltage is high (Vcc_start level, about 11 V), the IC will start switching. When the voltage is lower than Vcc_uvlo (about 8.7 V), the IC will stop switching.Note: This pin is not self supplied by internal source like in TEA1507 |
| 3 | Gnd | This pin is Ground of the IC. |
| 6 | Ctrl | This pin is connected to the feedback loop. The pin will control the "on" time between 1 V to 1.5 V. |
| 7 | Demag | This pin is connected to the Vcc winding of 5512. It contains three functions: 1) During magnetisation, the input voltage is sensed to compensate OCP level for OPP, 2) During demagnetisation, the output voltage is sensed for OVP and 3) a comparator is used to prevent continuous conduction when the output is overloaded. |
| 9 | Sense | This pin contains three different functions: 1) dectection of soft start, protection levels of 2) OCP, and 3) SWP. |
| 11 | Driver | This pin will drive the (MOSFET) switch. |
| 12 | HVS | This is High Volt Spacer (n.a.) |
| 14 | Drain | Connected to the Drain of the external MOSFET switch, this is the input for valley sensing and initial internal supply. |

### 9.2.4 Standby Mode

In this mode, IC7511 (TEA1506) will be totally disabled. So there is no voltage on the main transformer output. But IC7531 (TEA1523) will still work and will provide the necessary output voltages (6V -> 5V, 3.3V, 3V -> 1.8V) to the Hercules (IC7200).

**Table 9-3 PSU voltage overview**

| Voltage | Normal operation | Stdby mode |
|---|---|---|
| V_batt | 130 - 143 V | 0 V |
| V_audio | +/- 15.5 V | 0 V |
| +6V | 6 V | 6 V |
| +3V | 3 V | 3 V |
| Stdby_con | 0 V | 3.3 V |

## 9.3 Deflection

### 9.3.1 Synchronization

Before the Hercules (IC7200) can generate horizontal drive pulses, the +3.3V supply voltages must be present. After the start up command of the microprocessor (via I2C), the Hercules outputs the horizontal pulses. These horizontal pulses begin “initially” with double line frequency and then change “gradually” to line frequency in order to limit the current in the line stage (slow-start).

The VDRA and VDRB signals are the balanced output currents (sawtooth shaped) of the frame oscillator (pins 106 and 107 of the Hercules). These output signals are balanced, so they are less sensitive to disturbances.

There is a current source inside the UOC at pin 102. This pumps energy in the capacitor connected to this pin producing a pure saw tooth. The vertical drive signals and the E/W correction signal are derived.

Pin 108 is the East-West drive (or AVL), and it is a single ended current output. The correction for "horizontal width for changed EHT" from this pin is available by setting the HCO bit to "1".

The Phase-2 Compensation available at pin 113 gives frame correction for high beam currents. The phase compensation signal is used to correct the phase of the picture from the horizontal drive signal.

Pin 63 is the SANDCASTLE output (contains all sync info) and also HORIZONTAL FLYBACK (HFB) input.
Pin 97 is the EHT tracking/over-voltage protection pin. The HCO bit can switch on the tracking on EW. If the voltage at pin 97 exceeds 3.9 V, the over-voltage protection will be activated and the horizontal drive is switched "off" via a slow stop.

### 9.3.2 Horizontal Deflection

There are several executions (depending on the CRT):
- **Sets with no East-West correction.** The principle of the horizontal deflection is based on the quasi-diode modulation circuit. This horizontal deflection circuit supplies the deflection current and auxiliary voltages from the LOT.
- **Sets with East-West correction.** The principle of the horizontal deflection is based on a diode modulator with east-west correction. This horizontal deflection circuit supplies the deflection current and auxiliary voltages from the LOT.
- **Sets with dynamic East-West correction.** The principle of the horizontal deflection is based on a diode modulator with dynamic east-west correction for picture tubes with inner pincushion. This horizontal deflection circuit supplies the deflection current and auxiliary voltages from the LOT.

***Basic Principle***
During a scan period, either the Line Transistor or diode(s) conduct to ensure a constant voltage over the deflection coil (that results in a linear current). During the flyback period, the Line Transistor stops conducting, and the flyback capacitor(s) together with the inductance of the deflection coil creates oscillation.

***First Part of Scan***
Pin 62 of the UOC delivers the horizontal drive signal for the Line Output stage. This signal is a square pulse of line frequency. L5402 is the flyback drive transformer. This transformer de-couples the line output stage from the UOC. It has a direct polarization. The flyback drive circuit works with the start-up supply taken from +6V of the Aux supply (and subsequently taking from VlotAux+9V). When the H-drive is high, TS7404 conducts, and transformer L5402 starts to store energy. The base of the line transistor TS7405 is low and therefore blocks. The current in the deflection coil returns from diode D6404.

***Second Part of Scan***
When the H-drive is low, TS7404 does not conduct, and the energy that is stored in the transformer will transfer to the secondary, making the base of the Line Transistor high. Then the Line Transistor starts to conduct. The current in the deflection coil returns from the transistor in another direction.

***Flyback***
At the moment the H-drive becomes high, the base of the Line Transistor becomes low. Both the Line Transistor and the Flyback Diode will block. There is an oscillation between the flyback capacitor C2412 and the deflection coil. Because of the inductance of the LOT, the Line Transistor cannot stop conducting immediately. After the Line Transistor is out of conduction, the flyback pulse is created. The flyback capacitor charges until the current in the deflection coil reduce to zero. Then it discharges through the deflection coil and the deflection current increases from the other direction. The flyback diode conducts and is back to the first part of the scan.

***Linearity Correction***
Because the deflection coil has a certain resistance, a picture without any linearity issues cannot be expected. L5401 is the linearity coil to compensate for this resistance. It is a coil with a pre-magnetized core. This correction is called linearity correction.

***Horizontal S-Correction***
Because the electronic beam needs to travel a longer distance to both sides of the screen than the center, the middle of the screen would become narrower than both sides. To prevent this, a parabolic voltage is applied across the deflection coil during scan. To create this parabolic voltage, a capacitor called S-cap (C2417/C2418) is used as a voltage source during scan. The sawtooth current of the deflection through this capacitor creates the required parabolic voltage. This correction is called S-Correction.

***Mannheim-Circuit***
When the EHT is heavily loaded with a bright line, the flyback time can be increased a bit in this situation. As a result, the scan delays a bit causing a DC-shift to the right in the next line, which would create a small spike on the S-cap. This spike oscillates with the inductance of the deflection coil and the primary of LOT. The result is visible in vertical lines under horizontal white line. This is called the Mannheim-effect.

To prevent this from happening, a circuit called Mannheim-circuit is added. This consists of C2415, R3404, R3417 and D6406. During the scan, C2415 is charged via R3417. During the flyback, the S-correction parabola across the S-Cap C2417/C2418 is in its most negative, and D6406 conducts. Thus, C2415 is switched in parallel to C2417/C2418 during flyback. As C2415 is much larger than C2417/C2418, the voltage across C2415 reduces the Mannheim-effect oscillation.

***Class D East-West Driver***
To reduce the power loss of the normal used linear East-West amplifier, a class-D East-West circuit is used. To achieve this, the East-West parabola waveform EW_DRIVE from the Hercules (frame frequency) is sampled with a saw tooth (line frequency) taken from the line aux output. Then a series of width-modulated pulses is formed via two inverted phase amplifiers, filtered by an inductor, which then directly drive the diode modulated line circuit.

***East-West Correction***
To achieve a good geometry, **dynamic** S-correction is needed. The design is such that the tube/yoke needs East-West correction. Besides that, an inner pincushion is present after East-West correction. The line deflection is modulated with a parabolic voltage (frame frequency). In this way it is not so much at top and bottom, and much more in the middle.

Upon entering the picture geometry menu in the SAM mode, the following corrections will be displayed.
- EWW: East West Width.
- EWP: East West Parabola.
- UCP: Upper Corner Parabola.
- LCP: Lower Corner Parabola.
- EWT: East West Trapezium.

The East-West drive circuit realizes them all. The settings can be changed by a remote control. All changed data will be stored into the NVM after the geometry alignment.

***Panorama***

For Wide Screen sets, the S-correction of the picture has to adapt between the different picture modes. In particular, between 16:9 Wide Screen and 4:3 picture modes. This is achieved with the (separate) Panorama circuit (see diagram "G"). A signal (I2SDI1) from the UOC controls the state of TS7463. When in the normal 16:9 Wide Screen mode, the signal is "low" and therefore TS7463 is switched "off". When the 4:3 mode is selected, this signal from the UOC is pulled "high", switching TS7463 "on". The relay 1463 on the Panorama panel is subsequently turned "on" and, in effect, paralleling capacitor C2475/C2474 to the S-Cap C2469/ C2470. This changes the overall effective S-correction. The relay is switched "on" in 4:3 and Superwide picture modes.

### 9.3.3 Auxiliary Voltages

The horizontal deflection provides various auxiliary voltages derived either directly or indirectly from the secondary pins of the LOT:

- +9V: This supplies the Hercules's flyback driver.
- +11V: This supplies the frame amplifier.
- -12V: This supplies the frame amplifier.
- 50V: This supplies the frame amplifier.
- Filament: This supplies the heater pins of the picture tube.
- VideoSupply (+200V from primary side of LOT): This supplies the RGB amplifier and Scavem circuit at the CRT panel.

**Notes:**

- The V_T voltage (to tuner) is drawn from V_batt.
- The EHT voltage is generated by the Line Output Transformer (LOT). The Focus and Vg2 voltages are created with two potentiometers integrated in the transformer.

### 9.3.4 Beam Current

The beam current is adjusted with R3451 and R3452. The components R3473, R3453 and C2451 determine the EHT_info characteristic. The voltage across C2412 varies when the beam current changes. This EHT_info is used to compensate the picture geometry via pin 97 of the Hercules when the picture changes rapidly, and compensate the phase 2 loop via pin 113 of the Hercules. Also from the EHT_info line, a BCL signal is derived and sent to the Hercules for controlling the picture's contrast and brightness.

When the picture content becomes brighter, it will introduce:

- Geometry distortion due to the impedance of the LOT causing the EHT to drop.
- Picture blooming due to the picture characteristics

Because of the above mentioned, we will need a circuit for Beam Current Limiter (BCL) and EHT compensation (EHT_info). These two circuits derive the signal from the picture tube current info through LOT pin 10.

***BCL***

- When the BCL pin voltage goes to 2.8 V, the Hercules will start to limit CONTRAST gain.
- When it reaches 1.7 V, then the BRIGHTNESS gain limit will start to react.
- When BCL pin voltage goes to 0.8 V, the RGB will be blanked.

Components TS7483, R3490, R3491, R3492, and C2483 are for fast beam current limiting (e.g. with a Black-to-White pattern).

Components R3454, D6451, D6450, C2453, R3493, and C2230 are for average beam current limiting. C2453 and R3493 also control the timing where average beam current limiting is more active or less active.

***EHT_info***

The "PHI2 correction" is to correct the storage time deviation of the Line Output Transistor, which is causing geometry distortion due to brightness change.
Line EHT_info is to correct the geometry distortion due to EHT deviation.
Both of them feedback through the EHTO and PH2LF pin, and correct the geometry through the East-West circuit.

***Power Down***

The power down connection is for EHT discharge during AC Power "Off" state. In the Hercules, if EHT_info > 3.9 V, it will trigger the X-ray protection circuit via a 2fH soft stop sequence. The Hercules bits OSO (Switch Off in Vertical Over scan) and FBC (Fixed Beam Current Switch Off) will discharge the EHT with 1mA cathode current at over-scan position.
During switch-off, the H_out frequency is doubled immediately and the duty cycle is set to 25% fixed, during 43 ms. The RGB outputs are driven "high" to get a controlled discharge of the picture tube with 1 mA during 38 ms. This will decrease the EHT to about half the nominal value (= safety requirement). When bit OSO is set, the white spot/flash during switch-off will be written in overscan and thus will not be visible on the screen. Careful application must guarantee that the vertical deflection stays operational until the end of the discharge period.

### 9.3.5 DAF

The Dynamic Astigmatic Focus (DAF) circuit is required by 34RF sets only. It provides vertical DAF and horizontal DAF. Both of the parabola signals are derived through integration by using chassis available signals:

- The vertical parabola is using RC integration (via R3403 and C2401) on the Frame sensing resistor saw tooth (Frame_FB).
- The horizontal parabola is obtained by 2 RC integration (R3409, R3410, C2402, C2403) on the +9V LOT output.

Both of the parabolas are added on the output stage through adder TS7402 and TS7403. The collector of TS7402 emitter-drives TS7401 and is amplified by pull up resistor R3411. D6401 and C2405 provide the rectified supply voltage.

### 9.3.6 X-ray Protection

The X-ray protection circuit rectifies the filament voltage and uses it to trigger TS7481 when the EHT is too high. TS7481 is biased at "off" condition by D6480, R3482, and R3483 during normal operation. When the EHT goes too high, the voltage across R3482 will tend to increase as well, while the voltage across D6481 is fixed. Up to certain level (triggering point), TS7481 will be "on" and will force the EHT_info > 3.9 V. The chassis will be shut down through a soft stop sequence.

### 9.3.7 Vertical Deflection

The Frame stage consists fully of discrete components. This has the advantage for better flash behavior than when an IC was used.

The Frame differential drive signal from the Hercules comes from a current source. Resistors R3460 and R3461 convert them into a voltage, and feed them into the differential amplifier TS7455 and TS7456. The output of TS7456 is input to the next amplification stage of TS7452. Finally, TS7451 and TS7453 deliver the Vertical yoke current to the coil and feedback through the sensing resistors R3471 and R3472.
D6458 and TS7454 are used to bias TS7451 and TS7453, to get rid of zero crossovers, which can cause horizontal lines at the screen center.
The negative supply is from -12V and the positive scanning supply is from +12V through D6459. The flyback supply is derived from D6455, D6456 and C2456. This circuit is a voltage doubler, which stores energy in C2456 during the Line flyback

period and delivers the energy to C2465 during the Line scanning period. Throughout the Frame period, the charging and discharging of C2456 works alternatively. However, at the first half of the Frame scanning, TS7451 is “on” and consumes all the charge from C2456. When entering 2nd half Frame period, TS7451 is “off”, so C2456 will gradually charge up to the required flyback supply.

C2463, R3464 and D6457 are for boosting the base voltage of TS7451 during the flyback period and the 1st half Frame period as well. C2463 is charged by D6457 during the 2nd half scanning. R3467 and R3468 are for oscillation damping.

The V_guard protection is to protect the Frame stage if a fault condition happens. The V_guard will sense the pulse with voltage > 3.8 V and period < 900 us. Any signal out of this range will be considered as fault, and the chassis will be shut down.

#### 9.3.8 Tilt and Rotation

The rotation control signal is a PWM output from the UOC. It is filtered by R3252, R3246, R3259 and C2259. The DC voltage after filtering at C2259 will be amplified by R3245 (Main Board) and R3390 (CRT panel).
The output stage functions similarly as in L01.1/M8 with rotation IC TDA8941P. TS7331/TS7382 and TS7332/TS7381 will function alternatively corresponding to the rotation setting.

#### 9.3.9 CRT panel

The RGB amplifier stage is exactly the same as in L01.1/M8. However, the RGB amplifier IC has been changed to TDA6107AJF or TDA6108AJF. The “A” indication is with gain of “80” rather than “50” in L01.1/M8. The diode D6332 used in the former chassis, to solve the bright screen during start up, is not required because this IC has the error correction implemented.

***Scavem***
In certain versions, the Scavem feature is used to enhance the sharpness of the picture. The RGB signals are first differentiated and subsequently amplified before feeding to an auxiliary coil known as the SVM coil. The current, flowing through the SVM coil during the picture intensity transients, modulates the deflection field and thus the scan velocity.

During the first half of the intensity increase, the scan velocity is increased (thus decreasing the current density by spreading it on a wider area). During the second half of the intensity increase, the scan velocity is decreased (increasing the current density by concentrating it on a smaller area). The increasing current density transition is sharpened. A decreasing current density transition is processed in a similar way and is also sharpened.

In this chassis the SCAVEM signal is different from its predecessor because the Hercules generates the differential SCAVEM signal inside the IC.
The supply of the SCAVEM is taken from V_bat through a 1k5 / 5 W resistor. Compared with the L01.1/M8, this has the advantage of getting better performance for the pattern with tremendous SCAVEM current (like V_sweep). In this former chassis, because the supply was taken from the 200 V through a 8k2 / 5 W resistor, the supply dropped significantly during a large SCAVEM current. In this chassis, the drop due to the pattern will be less because of the lower supply voltage impedance.
In the Main Board, 1st stage amplification is taken care by 7208 with the pull up resistors (3361, 3387) located in the CRT panel.

TS7361 and TS7362 is the current buffer delivering the current to the output stage. The diode D6361 is to lightly bias these transistors, to get rid of the zero crossover of the stage.

After that, the signal is ac-coupled to TS7363 and TS7364 where the emitter resistors (R3364 and R3370) will determine the final SCAVEM current. TS7363 and TS7364 are biased by R3363, R3366, R3367 and R3368.
C2387, R3388, R3389, R3365, R3369, C2384, and C2385 are used for suppressing unwanted oscillations.
The function of TS7376 is to limit the SCAVEM current from going too high. It basically senses the voltage after R3373 and clamps the SCAVEM signal through D6367 and C2376.

## 9.4 Control

The Micro Controller is integrated with the Video Processor, and is called the Hercules. For dynamic data storage, such as SMART PICTURE and SMART SOUND settings, an external NVM IC is being used.
Another feature includes an optional Teletext/Closed Caption decoder with the possibility of different page storage depending on the Hercules type number.

The Micro Controller ranges in ROM from 128 kB with no TXT-decoder to 128 kB with a 10 page Teletext or with Closed Caption.

#### 9.4.1 Block Diagram

The block diagram of the Micro Controller application is shown below.

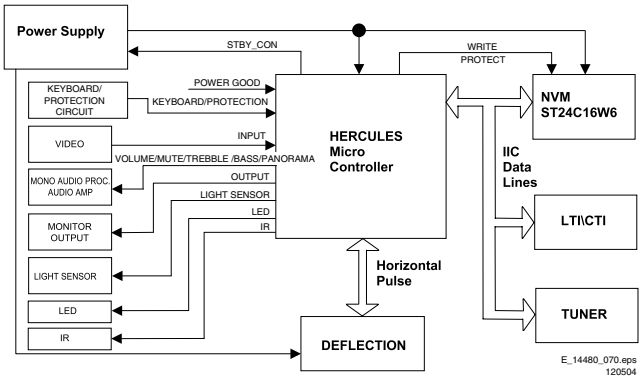


**Figure 9-4 Micro Controller block diagram**

#### 9.4.2 Basic Specification

The Micro Controller operates at the following supply voltages:
- +3.3 V_dc at pins 33, 125, and 19.
- +1.8 V_dc at pins 126, 36, and 33.
- I2C pull up supply: +3.3V_dc.

#### 9.4.3 Pin Configuration and Functionality

The ports of the Micro Controller can be configured as follows:
- A normal input port.
- An input ADC port.
- An output Open Drain port.
- An output Push-Pull port.
- An output PWM port.
- Input/Output Port

The following table shows the ports used for the L04 control:

**Table 9-4 Micro Controller ports overview**

| Pin | Name | Description | Configuration |
|---|---|---|---|
| 32 | INT0/ P0.5 | IR | INT0 |
| 31 | P1.0/ INT1 | PWRDOWN | INT1 |
| 30 | P1.1/ T0 | LED | P1.1 |
| 27 | P0.4/ I2SWS | (for future use) | - |
| 26 | P0.3/ I2SCLK | (for future use) | - |
| 25 | P0.2/ I2SDO2 | SEL_SC2_INTERFACE/ SDM | P0.2 |
| 24 | P0.1/ I2SDO1 | (for future use) | P0.1 |
| 23 | P0.0/ I2SDI/O | Panorama | P0.0 |
| 22 | P1.3/ T1 | Write Protect | P1.3 |
| 21 | P1.6/ SCL | SCL | SCL |
| 20 | P1.7/ SDA | SDA | SDA |
| 18 | P2.0/ TPWM | VOL_MUTE | P2.0 |
| 17 | P2.1/ PWM0 | ROTATION | PWM0 |
| 16 | P2.2/ PWM1 | SEL_LL'/M | P2.2 |
| 15 | P2.3/ PWM2 | STANDBY_CON | P2.3 |
| 14 | P3.0/ ADC0 | Light Sensor | ADC0 |
| 13 | P3.1/ ADC1 | (for future use) | - |
| 10 | P3.2/ ADC2 | (for future use) | - |
| 9 | P3.3/ ADC3 | KEYBOARD | ADC3 |
| 7 | P2.4/ PWM3 | A (for future use) | P2.4 |
| 6 | P2.5/ PWM4 | B (for future use) | P2.5 |
| 3 | P1.2/ INT2 | C (for future use) | INT2 |
| 2 | P1.4/ RX | E (for future use) | - |
| 1 | P1.5/ TX | D (for future use) | - |

The description of each functional pin is explained below:

- **LED.** This signal is used as an indication for the Standby, Remote and Error Indicator. Region diversity:
  - During protection mode, the LED blinks and the set is in standby mode.
  - During error conditions it blinks at a predefined rate.
  - After receiving a valid RC-5 or local keyboard command it flashes once.
  - For sets with error message indication, the LED blinks when message is active and the set is in standby mode.

**Table 9-5 LED signal diversity**

| LED | Europe | | AP/ LATAM | | NAFTA | |
|---|---|---|---|---|---|---|
| 0 | LED brighter | Standby | LED lighted | Standby | LED lighted | Normal |
| 1 | LED dimmer | Normal | LED "off" | Normal | LED "off" | Standby |

- **SCL.** This is the clock wire of the two-wire single master bi-directional I2C bus.
- **SDA.** This is the data wire of the two-wire single master bi-directional I2C bus.
- **STDBY_CON.** The Hercules generates this signal. This can enable the MAIN SMPS in normal operation and disable it during Standby. It is of logic "low" (0 V) under normal operation and "high" (3.3 V) during Standby.
- **IR.** This input pin is connected to an RC5 remote control receiver.
- **SEL-IF-LL'/ M-TRAP.** For AP: All L04 AP sets are Multi System QSS set. This is an output pin to switch the Video SAW filter between M system and other systems.
  - 0: NTSC M (default)
  - 1: PAL B/G, DK, I, L
- **Write Protect.** The global protection line is used to enable and disable write protection to the NVM. When write to the NVM is required, pin 7 of the NVM must be pulled to logic '0' first (via Write_Protect of the micro-controller pin) before a write is performed. Otherwise pin 7 of NVM must always be at logic "1"
  - 0: Disabled
  - 1: Enabled (default)
- **Mute.** This pin is use to MUTE the audio amplifier. It is configured as push pull.
- **Rotation.** This pin is configured as PWM for the Rotation feature. The output of the PWM is proportional to the feature control.
- **Light Sensor.** This pin is configured as ADC input for the Light Sensor.
- **Sel_SC2_Interface.** This pin is use to switch between the SC2_CVBS_OUT and the INTF_CVBS_OUT for the SCART_2_CVBS_OUT/ MONITOR_OUT signal.
  - 0: Hercules CVBS Output (default)
  - 1: Interface CVBS Output
- **PWRDOWN.** The AUX SMPS generates this signal. Logic "high" (3.3 V) under normal operation of the TV and goes "low" (0 V) when the Mains input voltage supply goes below 70 V_ac.
- **Keyboard.** Following are the Keyboard functions and the step values (8 bit) for it.

**Table 9-6 Local keyboard values**

| Function | Voltage (V_dc) | Step values (8 bit) |
|---|---|---|
| NAFTA Standby | 0 | 0 - 6 |
| Ch + | 0.43 | 7 - 33 |
| Exit Factory (Ch- and Vol-) | 0.69 | 34 - 53 |
| Ch - | 0.93 | 54 - 73 |
| Menu (Vol - and Vol +) | 1.19 | 74 - 96 |
| Vol - | 1.49 | 97 - 121 |
| DVD Eject | 1.8 | 122 - 147 |
| Vol + | 2.12 | 148 - 169 |

- **SDM.** This pin is configured as Open Drain during the cold start only. If this pin is shorted to ground during cold start, it will enter the SDM mode (for Service use).
- **ISP.** This pin is configured as Open Drain during the cold start only. If this pin is shorted to ground during cold start, it will enter the ISP mode (for Service use).
- **PANEL.** This pin is configured as Open Drain during the cold start only. If this pin is shorted to ground during that, then it will enter to the PANEL mode.
- **ResetEnabled.** This is an output pin to switch the control transistor (pos. TS7202) "high" or "low" for the reset of 1.8 V in case there is a corruption in the Hercules.

## 9.5 Tuner and IF

The tuner used in this chassis comes from two sources, from Philips and from Alps. Both tuner sources have the same pin configuration so they are 1 to 1 compatible except for the software, which will be selected by means of Option Settings.

Some features:

- Multi-Standard alignment free PLL-IF, including SECAM L/ L'.
- Integrated IF-AGC time constant.
- Integrated sound band-passes and traps (4.5 / 5.5 / 6.0 / 6.5 MHz).
- Group delay compensation (for NTSC and for PAL).
- QSS versions with digital Second-Sound-IF SSIF (AM demodulator for free).
- FM mono operation possible: Inter-Carrier or QSS.

### 9.5.1 Diversity

The following Tuners can be present (depending on the region and the set execution):

- Normal tuner without PIP.
- FM radio tuner without PIP.
- Normal tuner with PIP (main tuner with splitter).
- FM radio set with PIP (PIP tuner with splitter).

The SAW filter used, depends on the application concept (whether it is a QSS concept or an Intercarrier):

- OFWM3953M for QSS Video.
- OFWK9656M for QSS Audio.
- OFWM1971M for Intercarrier.

### 9.5.2 Pin Assignments and Functionality

Pin assignment of the Tuner:

**Table 9-7 Pinning Tuner**

| Pin | Pin Description | DC Voltages |
|---|---|---|
| 1 | RF-AGC | 4V for Maximum Gain < 4V for Strong Signal Condition |
| 2 | FM Radio Input or N.C | - |
| 3 | NC (Address Pin) | - |
| 4 | SCL | 0 to 3.3 V_dc |
| 5 | SDA | 0 to 3.3 V_dc |
| 6/7 | Supply Voltage | 5 V_dc +/- 0.25 V |
| 8 | N.C | - |
| 9 | Tuning Supply Voltage | 30 to 35 V_dc |
| 10 | FM Radio IF Output/Ground | - |
| 11 | TV IF Output | - |

Pin assignment of the several SAW filters (depends on region/ execution):

**Table 9-8 Pinning SAW filters**

| Pin | QSS Video (item 1002) | QSS Video (item 1003) | QSS Audio (item 1001) | Intercarrier (item 1002) |
|---|---|---|---|---|
| 1 | Input | Input | Input | Input |
| 2 | Input Ground | Input Ground | Switching Input | Input Ground |
| 3 | Ground | Ground | Ground | Ground |
| 4 | Output | Output | Output | Output |
| 5 | Output | Output | Output | Output |
| 6 | - | n.c. | - | - |
| 7 | - | n.c. | - | - |
| 8 | - | Ground | - | - |
| 9 | - | Free | - | - |
| 10 | - | Switching input | - | - |

The table below shows the switching behavior of SAW filter.

**Table 9-9 Switching behavior SAW filter**

| | Condition | |
|---|---|---|
| | High | Low |
| System | M | BG/DK/I/L |

**Note:** The logic level is measured at the base of transistor 7001.

### 9.5.3 Option Settings

The option settings for the Tuner type can be found in Option setting 1 of the SAM mode. The Option settings for Option 1 are as follows:

- Option Byte 1
  - Bit 7: OP_PHILIPS_TUNER
  - Bit 6: OP_FM_RADIO
  - Bit 5: OP_LNA
  - Bit 4: OP_ATS
  - Bit 3: OP_ACI
  - Bit 2: OP_UK_PNP
  - Bit 1: OP_VIRGIN_MODE
  - Bit 0: OP_CHINA

For more details on the option settings, please refer to the chapter 8 “Alignments”.

## 9.6 Source Select

For this chassis, the audio/video source selection is controlled via the Hercules.

The Audio/Video Source Select is one of the more complex functions due to its diversity and complex switching. The Audio/ Video Source Select comprises of the following components:

- The Hercules itself for Mono Audio and Video Source Selection.
- The HEF switch for Stereo Audio as well as Video Selection.

### 9.6.1 Options

The option settings for the Source Selection can be found in Option settings of the SAM mode. The Option settings for Option 5 are as follows:

- Option Byte 5
  - Bit 7: AV1
  - Bit 6: AV2
  - Bit 5: AV3
  - Bit 4: CVI
  - Bit 3: SVHS2
  - Bit 2: SVHS3
  - Bit 1: HOTEL MODE
  - Bit 0:

For more detail on the option settings, please refer to the chapter 8 “Alignments”.

### 9.6.2 Diversity

The basic diversity of the Audio/Video Source Select is between the Mono and the Stereo sets and the number of Cinch/SCART’s as specified in the product specification. The table below shows the Audio/Video Source Select diversity for all regions:

**Table 9-10 AV Source Select diversity**

| Pin | Symbol | Remark |
|---|---|---|
| 51 | R/Pr IN3 | AV1 (CVI) |
| 50 | G/Y IN3 | |
| 49 | B/Pb IN3 | |
| 52 | INSSW3 | |
| 74 | CVBS2/Y2 | |
| 95 | AUDIO IN5 L | |
| 94 | AUDIO IN5 R | |
| 73 | AUDIO IN3 L | AV2 (SVHS) |
| 72 | AUDIO IN3 R | |
| 71 | CVBS3/Y3 | |
| 70 | C2/C3 | |
| 80 | AUDIO IN4 L | Side (SHVS) |
| 79 | AUDIO IN4 R | |
| 78 | CVBS4/Y4 | |
| 77 | C4 | |
| 81 | IFVO/SVO/CVBSI | Monitor Out |
| 67 | AUD OUT HP L | |
| 66 | AUD OUT HP R | |
| 69 | AUD OUT LS L (AUD OUT/AM OUT) | HP/ LS Out |
| 68 | AUD OUT LS R | |
| 59 | V IN (R/Pr IN2/CX) | Interface |
| 58 | U IN (B/Pb IN2) | |
| 57 | Y IN (G/Y IN2/CVBS-Yx) | |
| 54 | U OUT (INSSW2) | |
| 76 | AUDIO IN2 L | |
| 75 | AUDIO IN2 R | |
| 86 | DVBO/IFVO/FMRO | N.C. |
| 65 | CVBSO/PIP | PIP application |
| 56 | Y SYNC | 100 nF |
| 55 | Y OUT | 100 nF |
| 53 | V OUT (SWO) | N.C. |
| 93 | AUD OUT S L | N.C. |
| 92 | AUD OUT S R | N.C. |

**Table 9-11 SCART Source Select diversity**

| Pin | Symbol | Remark |
|---|---|---|
| 51 | R/Pr IN3 | SCART 1 |
| 50 | G/Y IN3 | |
| 49 | B/Pb IN3 | |
| 52 | INSSW3 | |
| 74 | CVBS2/Y2 | |
| 86 | DVBO/IFVO/FMRO | |
| 95 | AUDIO IN5 L | |
| 94 | AUDIO IN5 R | |
| 93 | AUD OUT S L | |
| 92 | AUD OUT S R | |
| 71 | CVBS3/Y3 | SCART 2 |
| 70 | C2/C3 | |
| 81 | IFVO/SVO/CVBSI | |
| 73 | AUDIO IN3 L | |
| 72 | AUDIO IN3 R | |
| 67 | AUD OUT HP L | |
| 66 | AUD OUT HP R | |
| 80 | AUDIO IN4 L | Side I/O |
| 79 | AUDIO IN4 R | |
| 78 | CVBS4/Y4 | |
| 77 | C4 | |
| 69 | AUD OUT LS L (AUD OUT/AM OUT) | LS/ HP/ MON OUT |
| 68 | AUD OUT LS R | |
| 59 | V IN (R/Pr IN2/CX) | Interface |
| 58 | U IN (B/Pb IN2) | |
| 57 | Y IN (G/Y IN2/CVBS-Yx) | |
| 54 | U OUT(INSSW2) | |
| 76 | AUDIO IN2 L | |
| 75 | AUDIO IN2 R | |
| 65 | CVBSO/PIP | for PIP |
| 56 | YSYNC | 100 nF |
| 55 | YOUT | 100 nF |
| 53 | VOUT(SWO) | N.C. |

### 9.6.3 Audio Source Selection

The signals coming out of the DEMDEC (internal demodulator/ decoder block of the Hercules) are selectable and consist of the following (depending on the transmission):
- DEC L/R (Can be NICAM, FM 2CS, or BTSC Stereo).
- Mono (Refers to fallback/forced Mono in Stereo Transmission).
- SAP.

For L04, the assigned I/O with respect to the Hercules is as follows:
- SCART1 or AV1 Input assigned to **Audio In 5**.
- SCART2 or AV2 Input assigned to **Audio In 3**.
- Side AV Input assigned to **Audio In 4**.
- External Interface Input assigned **to Audio In 2**.
- SCART1 Output assigned to **SCART Output**.
- SCART2 Output (EU) or Monitor Output (LA/NA/AP) assigned to **Headphone Output**.
- Constant Level Output assigned to **Loudspeaker Output**.

### 9.6.4 Video Source Selection

Video source selection is done inside the Hercules. Therefore it provides a video switch with 3 external CVBS inputs and a CVBS output. All CVBS inputs can be used as Y-input for Y/C signals. However, only 2 Y/C sources can be selected because the circuit has 2 chroma inputs.
All input signals are converted to YUV, and looped through an external interface. This to enable picture improvement features (like LTI/CTI) or PIP.

## 9.7 Video Processing

The Video Processor is basically the Hercules and the TDA9178 (CTI/LTI). Video processing is done in these two chips such as the Brightness Control, Contrast Control and so on.

Some features:
- Full YUV-loop interface (alternative functions: DVD, RGB or Y/C).
- Internal OSD insertion (not Saturation or Contrast controlled).
- Double window implementation.
- Linear / non linear scaling for 16:9 sets.
- Tint (hue) on UV signals (including DVD).
- Peaking, Coring, Black \ Blue \ White-stretch.
- Transfer-Ratio and Scavem (also on TXT).

### 9.7.1 Features

The features included in the Hercules are as follows:
- Brightness Control.
- Contrast Control.
- Saturation Control.
- Sharpness Control.
- Peak White Limiter.
- Beam Current Limiter.
- Black Stretch (Contrast Plus).

For sets with the TDA9178, there are two extra features:
- Luminance Transient Improvement (LTI).
- Color Transient Improvement (CTI).

### 9.7.2 Block Diagram

Following diagram is the block diagram of the video processing part:

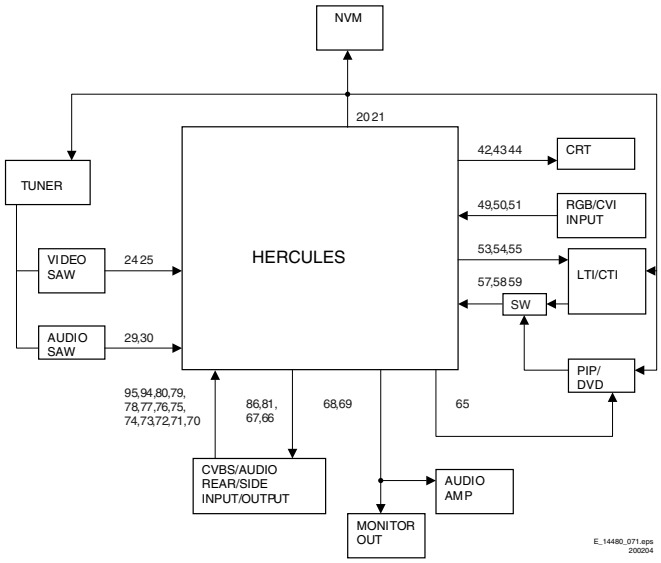


**Figure 9-5 Video processing block diagram**

### 9.7.3 LTI/CTI

The TDA9178 is an I2C-bus controlled IC (INCREDIBLE chip) with YUV interface. This IC can do mainly histogram processing, color transient improvement (CTI) and line transient improvement (LTI).
- Luminance Vector Processing involves histogram function, which provides scene dependent contrast improvement, adaptive black and white point stretching.
- Color Vector Processing involves skin tone correction, green enhancement and blue stretch.

- Spectral Processor involves step improvement processing, contour processing, smart sharpness control, color dependant sharpness and Color Transient Improvement.
- Noise detector, feature mode detector and cue flash functions.
- Demonstration mode shows all the improvement features in one picture.

**Table 9-12 Pinning overview TDA9178**

| Pin | Symbol | Description |
|---|---|---|
| 1 | SC | Sandcastle input pin |
| 2 | n.c. | Not connected pin |
| 3 | ADEXT1 | External AD-conversion #1 input pin |
| 4 | ADEXT2 | External AD-conversion #2 input pin |
| 5 | ADEXT3 | External AD-conversion #3 input pin |
| 6 | Y in | Luminance input pin |
| 7 | ADR | Address selection input pin |
| 8 | U in | -(B-Y) signal input pin |
| 9 | V in | -(R-Y) signal input pin |
| 10 | TP | Testpin, connected to ground |
| 11 | SCL | I2C-bus: clock input pin |
| 12 | n.c. | Not connected pin |
| 13 | n.c. | Not connected pin |
| 14 | SDA | I2C-bus: data input pin |
| 15 | DECDIG | Decoupling digital supply |
| 16 | V out | -(R-Y) signal output pin |
| 17 | U out | -(B-Y) signal output pin |
| 18 | V ee | Ground pin |
| 19 | Y out | Luminance output pin |
| 20 | V cc | Supply-voltage pin |
| 21 | S out | Luminance output for SCAVEM |
| 22 | CF | Cue-flash output pin |
| 23 | n.c. | Not connected pin |
| 24 | n.c. | Not connected pin |

### 9.7.4 Options

The option settings allow for process of the video as per set specification. The option settings can be found in “Option 2” and “Option 6” in the SAM mode. The option settings are as follows:

- Option Byte 2
  - Bit 7:
  - Bit 6 :OP_GREEN_UI
  - Bit 5: OP_CHANNEL_NAMING,
  - Bit 4: OP_LTI,
  - Bit 3: OP_TILT,
  - Bit 2: OP_FINE_TUNING
  - Bit 1: OP_PIP_PHILIPS_TUNER,
  - Bit 0: OP_HUE,
- Option Byte 6
  - Bit 7: OP_PERSONAL_ZAPPING,
  - Bit 6:
  - Bit 5: OP_FMTRAP
  - Bit 4: OP_COMBFILTER
  - Bit 3: OP_ACTIVE_CONTROL
  - Bit 2: OP_VIDEO_TEXT
  - Bit 1 :OP_LIGHT_SENSOR,
  - Bit 0: OP_DUAL_TEXT

For more details on the option settings, please refer to the chapter 8 “Alignments”.

## 9.8 Audio Processing

The audio decoding is done entirely via the Hercules. The IF output from the Tuner is fed directly to either the Video-IF or the Sound-IF input depending on the type of concept chosen. There are mainly two types of decoder in the Hercules, an analog decoder that decodes only Mono, regardless of any standards, and a digital decoder (or DEMDEC) that can decode both Mono as well as Stereo, again regardless of any standards.

In this chassis, the analog decoder is used in two cases:

- It is used for AM Sound demodulation in the Europe SECAM LL’ transmission.
- It is used for all FM demodulation in AP AV-Stereo sets.

### 9.8.1 Diversity

The diversity for the Audio decoding can be broken up into two main concepts:

- The Quasi Split Sound concept used in Europe and some AP sets.
- The Inter Carrier concept, used in NAFTA and LATAM.

The UOC-III family makes no difference anymore between QSS- and Intercarrier IF, nearly all types are software-switchable between the two SAW-filter constructions.

Simple data settings are required for the set to determine whether it is using the Inter Carrier or the QSS concept. These settings are done via the “QSS” and “FMI” bit found in SAM mode. Due to the diversity involved, the data for the 2 bits are being placed in the NVM location and it is required to write once during startup.

On top of that, it can be further broken down into various systems depending on the region. The systems or region chosen, will in turn affect the type of sound standard that is/are allowed to be decoded.

- For the case of **Europe**, the standard consists of BG/DK/I/LL’ for a Multi-System set. There are also versions of Eastern Europe and Western Europe set and the standard for decoding will be BG/DK and I/DK respectively. FM Radio is a feature diversity for the Europe sets. The same version can have either FM Radio or not, independent of the system (e.g. sets with BG/DK/I/LL’ can have or not have FM radio).
- For the case of **NAFTA** and **LATAM**, there is only one transmission standard, which is the M standard. The diversity then will be based on whether it has a dBx noise reduction or a Non-dBx (no dBx noise reduction).
- For the case of **AP**, the standard consists of BG/DK/I/M for a Multi-System set. The diversity here will then depends on the region. AP China can have a Multi-System and I/DK version. For India, it might only be BG standard.

### 9.8.2 Functionality

The features available in the Hercules are as follows:

- Treble and Bass Control.
- Surround Sound Effect that includes:
  - Incredible Stereo.
  - Incredible Mono.
  - 3D Sound (not for AV Stereo).
  - TruSurround (not for AV Stereo).
  - Virtual Dolby Surround, VDS422 (not for AV Stereo).
  - Virtual Dolby Surround, VDS423 (not for AV Stereo).
  - Dolby Pro-Logic (not for AV Stereo).
- Bass Feature that includes:
  - Dynamic Ultra-Bass.
  - Dynamic Bass Enhancement.
  - BBE (not for AV Stereo).
- Auto-Volume Leveler.
- 5 Band Equalizer.
- Loudness Control.

All the features stated are available for the Full Stereo versions and limited features for the AV Stereo

### 9.8.3 Audio Amplifier

The audio amplifier part is very straightforward. It uses the integrated power amplifier TDA2616Q, and delivers a maximum output of 2 x 10 W_rms.
The maximum operating condition for this amplifier is 21 V unloaded. Normal operating supply is from 7.5 V to 16 V.

Muting is done via the VOLUME_MUTE line connected to pin 2 of the amplifier-IC and coming from the UOC.

The following table shows pin functionality of the Audio Amplifier:

**Table 9-13 Pinning overview TDA2616**

| Pin | Pin Name | Normal Operation |
|---|---|---|
| 1 | Input Left | Input AC signal |
| 2 | Mute | 16 V_dc |
| 3 | Ground | 0 V |
| 4 | Output L Channel | AC waveform |
| 5 | Supply Voltage (negative) | -16 V_dc |
| 6 | Output R Channel | AC waveform |
| 7 | Supply Voltage (positive) | + 16 V_dc |
| 8 | Inverting inputs L and R | 0 V |
| 9 | Input Right | Input AC signal |

## 9.9 Picture in Picture (PIP)

The PIP application has two tuners, one with a splitter on the main chassis and another with "phono" input on the PIP panel. The same signal is injected to both tuners, so that it does not need separate auto tuning for the PIP tuner.

The TDA9887TS (item 7201) is an alignment free multi-standard vision and sound IF signal PLL demodulator for positive and negative modulation, including sound AM and FM processing.

The SDA9489 (item 7242) is a multi system color decoder with many features such as: half screen size PIP, selectable YUV or YPbPr, 16:9 application, WSS detection, Closed Caption, and OSD display for PIP window etc.

The PIP power supply is based on the step down converter principle. The +9V input voltage is converted to +5V and +3.3V via the regulator (item 7501).

## 9.10 Abbreviation list

| | |
|---|---|
| 2CS | 2 Carrier (or Channel) Stereo |
| ACI | Automatic Channel Installation: algorithm that installs TV sets directly from cable network by means of a predefined TXT page |
| ADC | Analogue to Digital Converter |
| AFC | Automatic Frequency Control: control signal used to tune to the correct frequency |
| AFT | Automatic Fine Tuning |
| AGC | Automatic Gain Control: algorithm that controls the video input of the feature box |
| AM | Amplitude Modulation |
| AP | Asia Pacific region |
| AR | Aspect Ratio: 4 by 3 or 16 by 9 |
| ATS | Automatic Tuning System |
| AV | External Audio Video |
| AVL | Automatic Volume Leveler |
| BCL | Beam Current Limitation |
| B/G | Monochrome TV system. Sound carrier distance is 5.5 MHz |
| BTSC | Broadcast Television Standard Committee. Multiplex FM stereo sound system, originating from the USA and used e.g. in LATAM and AP-NTSC countries |
| CC | Closed Caption |
| CCC | Continuous Cathode Calibration |
| ComPair | Computer aided rePair |
| CRT | Cathode Ray Tube or picture tube |
| CSM | Customer Service Mode |
| CTI | Color Transient Improvement: manipulates steepness of chroma transients |
| CVBS | Composite Video Blanking and Synchronization |
| CVI | Component Video Input |
| DAC | Digital to Analogue Converter |
| DBX | Dynamic Bass Expander or noise reduction system in BTSC |
| D/K | Monochrome TV system. Sound carrier distance is 6.5 MHz |
| DFU | Direction For Use: description for the end user |
| DNR | Dynamic Noise Reduction |
| DSP | Digital Signal Processing |
| DST | Dealer Service Tool: special remote control designed for dealers to enter e.g. service mode |
| DVD | Digital Versatile Disc |
| EEPROM | Electrically Erasable and Programmable Read Only Memory |
| EHT | Extra High Tension |
| EHT-INFO | Extra High Tension information |
| EPG | Electronic Programming Guide |
| EU | Europe |
| EW | East West, related to horizontal deflection of the set |
| EXT | External (source), entering the set via SCART or Cinch |
| FBL | Fast Blanking: DC signal accompanying RGB signals |
| FILAMENT | Filament of CRT |
| FM | Field Memory or Frequency Modulation |
| H | Horizontal sync signal |
| HP | Headphone |
| I | Monochrome TV system. Sound carrier distance is 6.0 MHz |
| I2C | Integrated IC bus |
| IF | Intermediate Frequency |

| | |
|---|---|
| IIC | Integrated IC bus |
| ITV | Institutional TV |
| LATAM | Latin American countries like Brazil, Argentina, etc. |
| LED | Light Emitting Diode |
| L/L' | Monochrome TV system. Sound carrier distance is 6.5 MHz. L' is Band I, L is all bands except for Band I |
| LS | Large Screen or Loudspeaker |
| M/N | Monochrome TV system. Sound carrier distance is 4.5 MHz |
| NC | Not Connected |
| NICAM | Near Instantaneous Compounded Audio Multiplexing. This is a digital sound system, mainly used in Europe. |
| NTSC | National Television Standard Committee. Color system mainly used in North America and Japan. Color carrier NTSC M/N = 3.579545 MHz, NTSC 4.43 = 4.433619 MHz (this is a VCR norm, it is not transmitted off-air) |
| NVM | Non Volatile Memory: IC containing TV related data e.g. alignments |
| OB | Option Bit |
| OC | Open Circuit |
| OP | Option Byte |
| OSD | On Screen Display |
| PAL | Phase Alternating Line. Color system mainly used in West Europe (color carrier = 4.433619 MHz) and South America (color carrier PAL M = 3.575612 MHz and PAL N = 3.582056 MHz) |
| PCB | Printed Circuit board |
| PLL | Phase Locked Loop. Used for e.g. FST tuning systems. The customer can give directly the desired frequency |
| POR | Power-On Reset |
| PTP | Picture Tube Panel (or CRT-panel) |
| RAM | Random Access Memory |
| RC | Remote Control handset |
| RGB | Red, Green, and Blue video signals |
| ROM | Read Only Memory |
| SDAM | Service Default / Alignment Mode |
| SAP | Second Audio Program |
| SC | Sandcastle: pulse derived from sync signals |
| S/C | Short Circuit |
| SCL | Serial Clock |
| SDA | Serial Data |
| SECAM | SEequence Couleur Avec Memoire. Color system mainly used in France and East Europe. Color carriers = 4.406250 MHz and 4.250000 MHz |
| SIF | Sound Intermediate Frequency |
| SS | Small Screen |
| STBY | Standby |
| SVHS | Super Video Home System |
| SW | Software |
| THD | Total Harmonic Distortion |
| TXT | Teletext |
| uP | Microprocessor |
| UOC | Ultimate One Chip |
| V | Vertical sync signal |
| V_BAT | Main supply voltage for the deflection stage (mostly 141 V) |
| V-chip | Violence Chip |
| VCR | Video Cassette Recorder |
| WYSIWYR | What You See Is What You Record: record selection that follows main picture and sound |
| XTAL | Quartz crystal |
| YC | Luminance (Y) and Chrominance (C) signal |

## 9.11 IC Data Sheets

This section shows the internal block diagrams and pin layouts of ICs that are drawn as "black boxes" in the electrical diagrams (with the exception of "memory" and "logic" ICs).

### 9.11.1 Diagram F, TDA9887 (IC7201)

**BLOCK DIAGRAM**

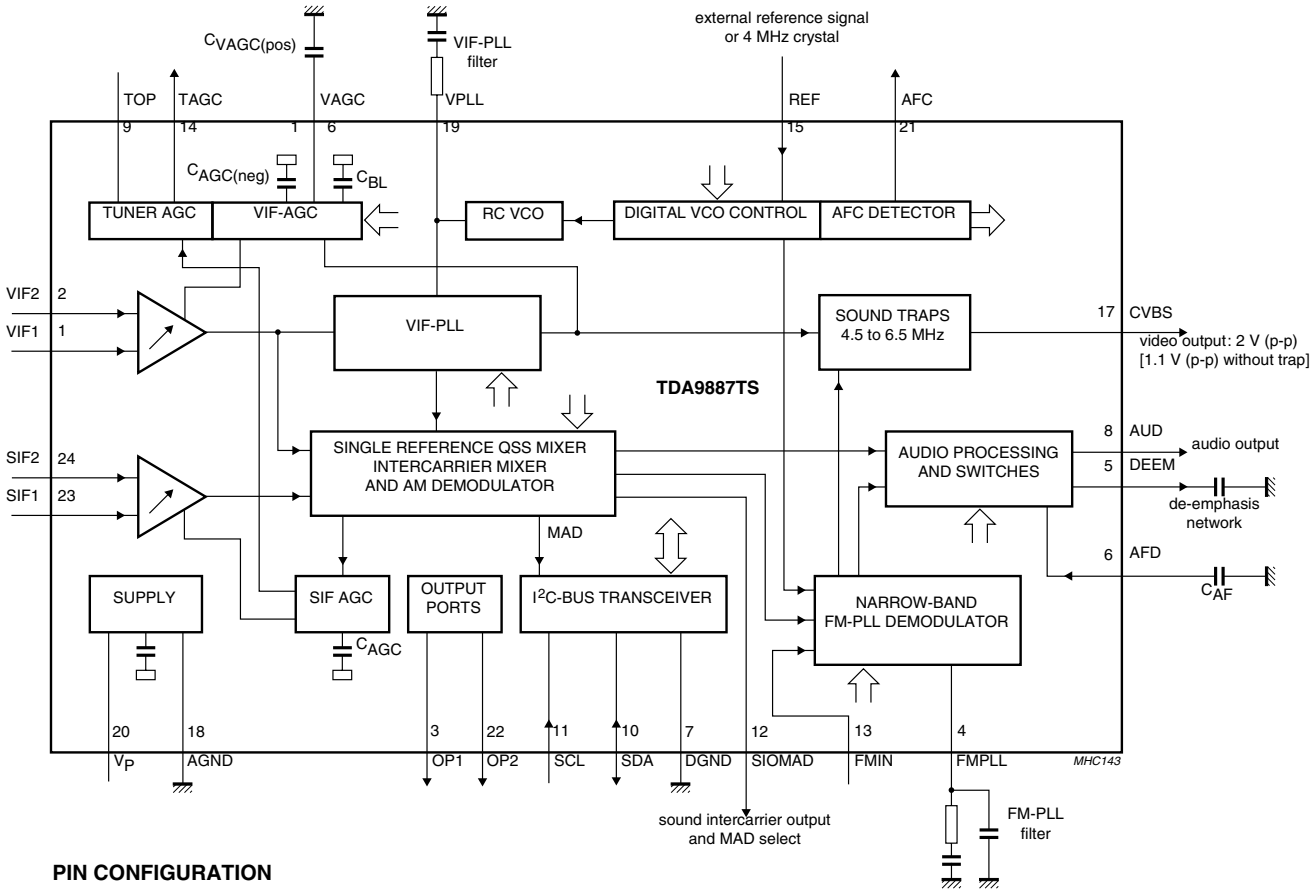


**PIN CONFIGURATION**

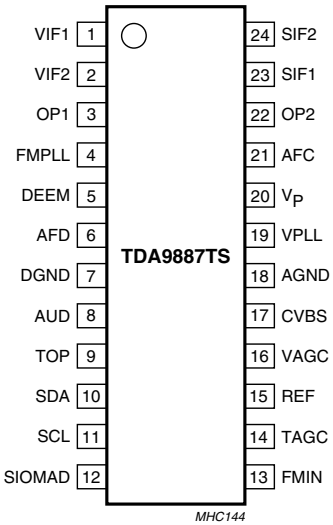


E_14480_129.eps
120504

**Figure 9-6 Internal Block Diagram and Pin Configuration**

### 9.11.2 Diagram H, TDA9178 (IC7610)

## BLOCK DIAGRAM

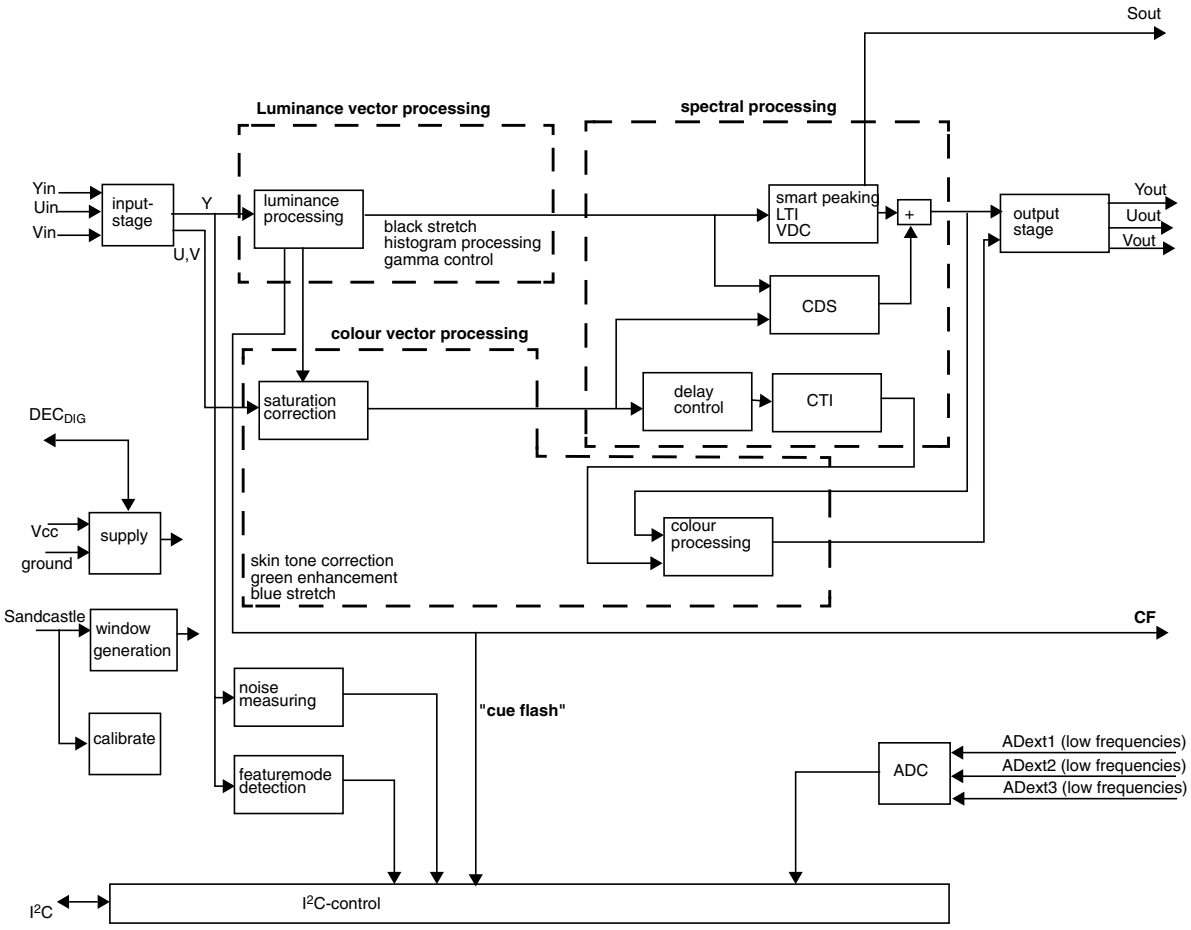


## PIN CONFIGURATION

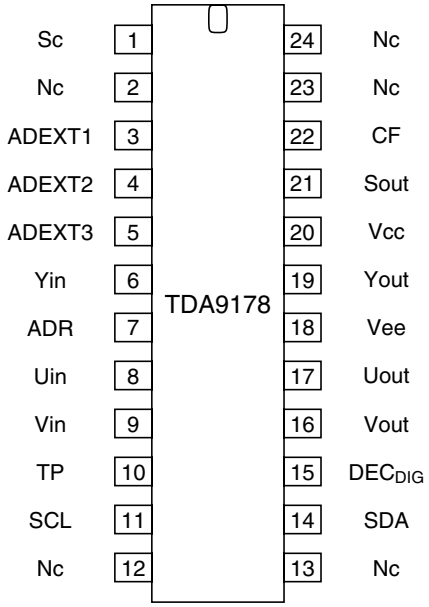


E_14480_075.eps
270204

**Figure 9-7 Internal Block Diagram and Pin Configuration**

# 10. Spare Parts List

## Set Level

### Various

| | | |
|---|---|---|
| 0041 | 3139 124 32221 | Lens |
| 0291 | 3111 254 23481 | Coil |
| 8278 | 3104 311 03391 | Cable 4P 1000mm |
| 8278▲ | 3104 311 03841 | Cable 4P |

⏦

| | | |
|---|---|---|
| 5203▲ | 2422 549 45514 | S100245 CU B |

## Mono Carrier [A]

### Various

| | | |
|---|---|---|
| 0041 | 3139 124 41421 | Lens |
| 1001 | 2422 549 44341 | 38.9 MHz |
| 1002 | 4822 242 81436 | Filter OFWK3953M |
| 1005 | 4822 267 10748 | Connector 3p |
| 1204 | 4822 265 41113 | 7P |
| 1205 | 2422 543 01421 | Crystal 24.576Mhz |
| 1206 | 2422 025 11244 | Connector 7p m |
| 1207 | 2422 025 11244 | Connector 7p m |
| 1212 | 2422 025 16052 | 12P Female |
| 1280 | 4822 267 10734 | Connector 5p |
| 1401 | 4822 265 30735 | Connector 5p |
| 1404▲ | 4822 267 10966 | Connector 2p |
| 1451▲ | 2422 025 10646 | Connector 2p m |
| 1452▲ | 4822 071 51252 | Fuse 1.25A |
| 1454▲ | 4822 071 51252 | Fuse 1.25A |
| 1500▲ | 2422 086 10914 | Fuse 4A 250V |
| 1501 | 2422 090 01101 | Soc Fuse 1P Female |
| 1502 | 2422 090 01101 | Soc Fuse 1P Female |
| 1503▲ | 2422 132 07467 | Relay 1p 12V 5A LKS1AF |
| 1504 | 4822 267 10774 | Connector 2p male (red) |
| 1505 | 4822 265 20723 | Connector 2p |
| 1506▲ | 2422 128 03111 | Switch |
| 1600 | 4822 276 13775 | Switch |
| 1601 | 4822 276 13775 | Switch |
| 1602 | 4822 276 13775 | Switch |
| 1603 | 4822 276 13775 | Switch |
| 1682 | 2422 025 16382 | Connector 3p m |
| 1684 | 3139 131 04162 | Cable 3P 100mm |
| 1693 | 2422 025 12482 | Connector 6p m |
| 1729 | 4822 267 10735 | Connector 3p |
| 1734 | 2422 026 05466 | Soc cinch 2P |
| 1763 | 3139 131 03952 | CABLE SIN 280mm |
| 8204 | 3139 131 03591 | Cable 7p 560mm |
| 8401 | 3139 121 09041 | Cable 5p 560mm |

⊣⊢

| | | |
|---|---|---|
| 2001 | 4822 122 33761 | 22pF 5% 50V |
| 2002 | 4822 122 33761 | 22pF 5% 50V |
| 2003 | 5322 126 11583 | 10nF 10% 50V 0603 |
| 2004 | 3198 024 44730 | 47nF 50V 0603 |
| 2005 | 4822 124 40769 | 4.7µF 20% 100V |
| 2006 | 4822 124 80791 | 470µF 20% 16V |
| 2007 | 2238 586 59812 | 100nF 20% 50V 0603 |
| 2008 | 2038 035 21307 | 68µ 25V |
| 2008 | 4822 124 40433 | 47µF 20% 25V |
| 2009 | 2238 586 59812 | 100nF 20% 50V 0603 |
| 2013 | 4822 122 33741 | 10pF 10% 50V |
| 2014 | 3198 016 31020 | 1nF 25V 0603 |
| 2016 | 3198 016 31020 | 1nF 25V 0603 |
| 2203 | 4822 124 41584 | 100µF 20% 10V |
| 2204 | 2238 916 15641 | 22nF 10% 25V 0603 |
| 2205 | 4822 126 13879 | 220nF +80-20% 16V |
| 2206 | 4822 126 13879 | 220nF +80-20% 16V |
| 2207 | 4822 126 13879 | 220nF +80-20% 16V |
| 2208 | 4822 126 13879 | 220nF +80-20% 16V |
| 2209 | 4822 126 13879 | 220nF +80-20% 16V |
| 2210 | 4822 126 13879 | 220nF +80-20% 16V |
| 2211 | 4822 126 13879 | 220nF +80-20% 16V |
| 2212 | 4822 126 13879 | 220nF +80-20% 16V |
| 2213 | 4822 126 13879 | 220nF +80-20% 16V |
| 2214 | 2238 586 59812 | 100nF 20% 50V 0603 |
| 2215 | 4822 126 13879 | 220nF +80-20% 16V |
| 2216 | 4822 126 13879 | 220nF +80-20% 16V |
| 2217 | 4822 124 40207 | 100µF 20% 25V |
| 2218 | 4822 124 40433 | 47µF 20% 25V |
| 2222 | 2238 586 15633 | 5.6nF 50V |
| 2223 | 2238 586 59812 | 100nF 20% 50V 0603 |
| 2224 | 4822 124 40207 | 100µF 20% 25V |
| 2225 | 4822 126 13879 | 220nF +80-20% 16V |
| 2226 | 4822 126 13879 | 220nF +80-20% 16V |
| 2229 | 4822 126 13879 | 220nF +80-20% 16V |
| 2230 | 4822 124 40769 | 4.7µF 20% 100V |
| 2231 | 2238 586 59812 | 100nF 20% 50V 0603 |
| 2232 | 2238 586 59812 | 100nF 20% 50V 0603 |
| 2233 | 2238 586 59812 | 100nF 20% 50V 0603 |
| 2234 | 4822 124 40207 | 100µF 20% 25V |
| 2235 | 5322 126 11582 | 6.8nF 10% 63V |
| 2236 | 5322 126 11583 | 10nF 10% 50V 0603 |
| 2237 | 2238 586 59812 | 100nF 20% 50V 0603 |
| 2238 | 4822 126 13879 | 220nF +80-20% 16V |
| 2239 | 4822 126 13879 | 220nF +80-20% 16V |
| 2240 | 4822 124 41631 | 1.5µF 50V |
| 2241 | 2238 916 15641 | 22nF 10% 25V 0603 |
| 2242 | 2238 586 59812 | 100nF 20% 50V 0603 |
| 2243 | 2238 586 59812 | 100nF 20% 50V 0603 |
| 2244 | 4822 126 14491 | 2.2µF 10V 0805 |
| 2245 | 3198 016 31020 | 1nF 25V 0603 |
| 2246 | 2238 586 59812 | 100nF 20% 50V 0603 |
| 2247 | 2238 586 59812 | 100nF 20% 50V 0603 |
| 2248 | 3198 016 31020 | 1nF 25V 0603 |
| 2249 | 2238 586 59812 | 100nF 20% 50V 0603 |
| 2250 | 4822 124 40207 | 100µF 20% 25V |
| 2251 | 2022 318 00212 | 150nF 50V |
| 2252 | 5322 126 11583 | 10nF 10% 50V 0603 |
| 2253 | 5322 126 11583 | 10nF 10% 50V 0603 |
| 2254 | 5322 126 11578 | 1nF 10% 50V 0603 |
| 2255 | 5322 126 11583 | 10nF 10% 50V 0603 |
| 2256 | 2238 586 59812 | 100nF 20% 50V 0603 |
| 2257 | 5322 126 11579 | 3.3nF 10% 63V |
| 2260 | 2238 586 59812 | 100nF 20% 50V 0603 |
| 2261 | 2238 586 59812 | 100nF 20% 50V 0603 |
| 2262 | 5322 126 11583 | 10nF 10% 50V 0603 |
| 2263 | 2238 586 59812 | 100nF 20% 50V 0603 |
| 2264 | 4822 126 14249 | 560pF 10% 50V 0603 |
| 2265 | 4822 124 40207 | 100µF 20% 25V |
| 2266 | 4822 126 14491 | 2.2µF 10V 0805 |
| 2267 | 4822 126 14491 | 2.2µF 10V 0805 |
| 2268 | 4822 122 33741 | 10pF 10% 50V |
| 2269 | 4822 122 33741 | 10pF 10% 50V |
| 2270 | 5322 126 11578 | 1nF 10% 50V 0603 |
| 2271 | 5322 126 11578 | 1nF 10% 50V 0603 |
| 2272 | 2238 586 59812 | 100nF 20% 50V 0603 |
| 2273 | 4822 124 40207 | 100µF 20% 25V |
| 2274 | 2238 586 59812 | 100nF 20% 50V 0603 |
| 2275 | 4822 124 40248 | 10µF 20% 63V |
| 2276 | 4822 126 14585 | 100nF 10% 0805 50V |
| 2279 | 2020 552 94427 | 100pF 5% 50V |
| 2280 | 3198 017 41050 | 1µF 10V 0603 |
| 2282 | 5322 126 11578 | 1nF 10% 50V 0603 |
| 2288 | 5322 126 11578 | 1nF 10% 50V 0603 |
| 2289 | 5322 126 11578 | 1nF 10% 50V 0603 |
| 2290 | 3198 017 41050 | 1µF 10V 0603 |
| 2404 | 4822 124 11936 | 47µF 20% 160V |
| 2406▲ | 4822 126 13185 | 680pF 10% 500V |
| 2408 | 2020 552 94427 | 100pF 5% 50V |
| 2409 | 2238 586 59812 | 100nF 20% 50V 0603 |
| 2410 | 4822 126 14585 | 100nF 10% 0805 50V |
| 2411▲ | 4822 126 12263 | 220pF 10% 2kV |
| 2412▲ | 4822 121 70637 | 8.2nF 5% 1600V |
| 2413▲ | 4822 121 70365 | 39nF 10% 400V |
| 2414 | 3198 017 41050 | 1µF 10V 0603 |
| 2415 | 2022 031 00172 | 2.2µF 160V |
| 2418▲ | 2222 479 90016 | 270nF 5% 250V |
| 2419 | 2222 468 90324 | 2.2µF 100V |
| 2420 | 3198 017 41050 | 1µF 10V 0603 |
| 2425 | 3198 017 33330 | 33nF 20% 16V 0603 |
| 2427 | 4822 121 51305 | 15nF 10% 50V |
| 2428 | 3198 017 33330 | 33nF 20% 16V 0603 |
| 2451 | 2222 365 85154 | 150nF 10% 100V |
| 2453 | 4822 126 14043 | 1µF +80-20% 16V 0805 |
| 2454 | 4822 124 80791 | 470µF 20% 16V |
| 2456 | 4822 122 32542 | 47nF 10% 63V |
| 2457 | 2022 031 00137 | 4.7µF 20% 250V |
| 2459▲ | 4822 122 31177 | 470pF 10% 500V |
| 2460 | 2022 031 00139 | 470µF 20% 16V |
| 2461 | 3198 016 31020 | 1nF 25V 0603 |
| 2462 | 3198 016 31020 | 1nF 25V 0603 |
| 2463 | 2020 021 91677 | 100µF 20% 50V |
| 2464 | 4822 126 13881 | 470pF 5% 50V |
| 2465 | 5322 124 40641 | 10µF 20% 100V |
| 2467 | 4822 121 70162 | 10nF 5% 400V |
| 2468 | 4822 126 13883 | 220pF 5% 50V |
| 2469 | 4822 126 13879 | 220nF +80-20% 16V |
| 2470 | 2222 601 55649 | 100nF 10% 100V 1206 |
| 2486 | 2252 508 08255 | 27pF 500V |
| 2487 | 5322 126 10465 | 3.9nF 10% 50V |
| 2488 | 2020 557 00002 | 33pF 200V |
| 2489 | 5322 126 11583 | 10nF 10% 50V 0603 |
| 2490 | 4822 122 32542 | 47nF 10% 63V |
| 2493 | 4822 124 81151 | 22µF 50V |
| 2500▲ | 2022 330 00053 | 470nF 275V |
| 2503▲ | 4822 126 14153 | 2.2nF 10% 1kV |
| 2504▲ | 4822 126 14153 | 2.2nF 10% 1kV |
| 2505 | 2020 024 90771 | 220µF 20% 400V |
| 2508▲ | 2022 330 00049 | 100nF 275V |
| 2509▲ | 2252 811 95022 | 1.5nF 20% 250V |
| 2511 | 4822 124 81151 | 22µF 50V |
| 2512 | 2238 586 59812 | 100nF 20% 50V 0603 |
| 2513 | 4822 126 13881 | 470pF 5% 50V |
| 2514▲ | 4822 126 13862 | 1.5nF 10% 2kV |
| 2515 | 4822 126 13881 | 470pF 5% 50V |
| 2516 | 2238 586 59812 | 100nF 20% 50V 0603 |
| 2517 | 5322 126 11578 | 1nF 10% 50V 0603 |
| 2528 | 4822 121 51252 | 470nF 5% 63V |
| 2530 | 2020 557 00005 | 330pF 100V |
| 2531 | 4822 126 13881 | 470pF 5% 50V |
| 2532 | 2020 552 96823 | 10µF 16V |
| 2533 | 4822 126 13193 | 4.7nF 10% 63V |
| 2534 | 2020 558 90261 | 68pF 1kV |
| 2535 | 4822 124 40184 | 1000µF 20% 10V |
| 2536 | 2020 012 93728 | 2200µF 20% 10V |
| 2538 | 4822 126 13881 | 470pF 5% 50V |
| 2539▲ | 4822 122 31177 | 470pF 10% 500V |
| 2541 | 4822 124 40433 | 47µF 20% 25V |
| 2542▲ | 2252 811 95021 | 1nF 10% 250V |
| 2543▲ | 4822 126 10206 | 2.2nF 10% 500V |
| 2549 | 2020 552 94427 | 100pF 5% 50V |
| 2550 | 2020 557 00002 | 33pF 200V |
| 2551▲ | 4822 126 13449 | 1nF 10% 2kV |
| 2552 | 2022 031 00165 | 100µF 160V |
| 2553 | 4822 126 14508 | 180pF 5% 50V 0603 |
| 2561▲ | 4822 122 31175 | 1nF 10% 500V |
| 2562 | 4822 124 12417 | 2200µF 20% 25V |
| 2562 | 4822 124 80061 | 1000µF 20% 25V |
| 2563 | 4822 124 12417 | 2200µF 20% 25V |
| 2563 | 4822 124 80061 | 1000µF 20% 25V |
| 2564 | 4822 126 14585 | 100nF 10% 0805 50V |
| 2565▲ | 4822 122 31175 | 1nF 10% 500V |
| 2570▲ | 2252 811 95017 | 470pF 10% 250V |
| 2571 | 3198 017 31530 | 15nF 20% 50V 0603 |
| 2572 | 5322 126 11583 | 10nF 10% 50V 0603 |
| 2573 | 2020 552 96683 | 220nF 10% 50V |
| 2601 | 3198 016 31020 | 1nF 25V 0603 |
| 2611 | 4822 124 40433 | 47µF 20% 25V |
| 2617 | 2238 586 59812 | 100nF 20% 50V 0603 |
| 2620 | 2238 586 59812 | 100nF 20% 50V 0603 |
| 2621 | 4822 124 40207 | 100µF 20% 25V |
| 2622 | 2222 867 15339 | 33pF 5% 50V 0603 |
| 2623 | 2238 586 59812 | 100nF 20% 50V 0603 |
| 2624 | 4822 124 40207 | 100µF 20% 25V |
| 2625 | 2022 552 05615 | 2.2µF 10% 6.3V 0805 |
| 2630 | 4822 051 30008 | Jumper 0603 |
| 2631 | 4822 124 41796 | 22µF 20% 16V |
| 2691 | 4822 124 40196 | 220µF 20% 16V |
| 2702 | 4822 126 14241 | 330pF 0603 50V |
| 2703 | 4822 124 40248 | 10µF 20% 63V |
| 2705 | 4822 126 14241 | 330pF 0603 50V |
| 2706 | 4822 126 14491 | 2.2µF 10V 0805 |
| 2708 | 4822 126 14241 | 330pF 0603 50V |
| 2709 | 4822 124 40248 | 10µF 20% 63V |
| 2711 | 4822 126 14241 | 330pF 0603 50V |
| 2712 | 4822 126 14491 | 2.2µF 10V 0805 |
| 2732 | 4822 126 14241 | 330pF 0603 50V |
| 2733 | 4822 124 40248 | 10µF 20% 63V |
| 2735 | 4822 126 14241 | 330pF 0603 50V |
| 2736 | 3198 017 41050 | 1µF 10V 0603 |
| 2738 | 4822 126 14241 | 330pF 0603 50V |
| 2739 | 4822 124 40248 | 10µF 20% 63V |
| 2741 | 4822 126 14241 | 330pF 0603 50V |
| 2742 | 3198 017 41050 | 1µF 10V 0603 |
| 2751 | 4822 126 14241 | 330pF 0603 50V |
| 2752 | 4822 124 40248 | 10µF 20% 63V |
| 2753 | 4822 126 14241 | 330pF 0603 50V |
| 2754 | 4822 124 40248 | 10µF 20% 63V |
| 2755 | 5322 126 11579 | 3.3nF 10% 63V |
| 2756 | 5322 126 11579 | 3.3nF 10% 63V |
| 2759 | 2222 867 15339 | 33pF 5% 50V 0603 |
| 2760 | 2238 586 59812 | 100nF 20% 50V 0603 |
| 2917 | 3198 032 27190 | 100µF 6.3V |
| 2985 | 4822 126 14508 | 180pF 5% 50V 0603 |
| 2986 | 2238 586 59812 | 100nF 20% 50V 0603 |
| 2987 | 2238 586 59812 | 100nF 20% 50V 0603 |
| 2988 | 2238 586 59812 | 100nF 20% 50V 0603 |
| 2989 | 3198 017 41050 | 1µF 10V 0603 |
| 2990 | 4822 126 14241 | 330pF 0603 50V |
| 2991 | 4822 126 14508 | 180pF 5% 50V 0603 |

| | | |
|---|---|---|
| 2992 | 3198 017 41050 | 1µF 10V 0603 |
| 2993 | 4822 126 14241 | 330pF 0603 50V |
| 2994 | 2238 916 15641 | 22nF 10% 25V 0603 |
| 2995 | 2238 916 15641 | 22nF 10% 25V 0603 |
| 2996 | 3198 024 44730 | 47nF 50V 0603 |
| 2997 | 3198 024 44730 | 47nF 50V 0603 |

–WW–

| | | |
|---|---|---|
| 3002 | 4822 051 30103 | 10kΩ 5% 0.062W |
| 3003 | 4822 051 30223 | 22kΩ 5% 0.062W |
| 3005 | 4822 051 30101 | 100Ω 5% 0.062W |
| 3006 | 4822 051 30103 | 10kΩ 5% 0.062W |
| 3007 | 4822 051 30222 | 2.2kΩ 5% 0.062W |
| 3008 | 4822 051 30682 | 6.8Ω 5% 0.062W |
| 3009 | 4822 051 30222 | 2.2kΩ 5% 0.062W |
| 3010 | 4822 051 30331 | 330Ω 5% 0.062W |
| 3014 | 4822 051 30102 | 1kΩ 5% 0.062W |
| 3016 | 4822 117 13632 | 100kΩ 1% 0603 0.62W |
| 3018 | 4822 051 30221 | 220Ω 5% 0.062W |
| 3019 | 4822 051 30154 | 150kΩ 5% 0.062W |
| 3201 | 4822 050 11002 | 1kΩ 1% 0.4W |
| 3202 | 4822 051 30332 | 3.3Ω 5% 0.062W |
| 3203 | 4822 051 30154 | 150kΩ 5% 0.062W |
| 3204 | 4822 051 30332 | 3.3Ω 5% 0.062W |
| 3205 | 4822 051 30102 | 1kΩ 5% 0.062W |
| 3206 | 4822 051 30562 | 5.6kΩ 5% 0.063W 0603 |
| 3207 | 4822 051 30109 | 10Ω 5% 0.062W |
| 3208 | 4822 051 30273 | 27kΩ 5% 0.062W |
| 3209 | 4822 117 12917 | 1Ω 5% 0.062W |
| 3210 | 4822 117 12917 | 1Ω 5% 0.062W |
| 3211 | 4822 051 30273 | 27kΩ 5% 0.062W |
| 3212 | 4822 051 30101 | 100Ω 5% 0.062W |
| 3214 | 4822 051 30109 | 10Ω 5% 0.062W |
| 3215 | 4822 116 52283 | 4.7kΩ 5% 0.5W |
| 3216 | 4822 051 30109 | 10Ω 5% 0.062W |
| 3217 | 4822 051 30103 | 10kΩ 5% 0.062W |
| 3218 | 4822 051 30101 | 100Ω 5% 0.062W |
| 3219 | 4822 051 30103 | 10kΩ 5% 0.062W |
| 3220 | 4822 051 30151 | 150Ω 5% 0.062W |
| 3221 | 4822 051 30271 | 270Ω 5% 0.062W |
| 3222 | 4822 051 30331 | 330Ω 5% 0.062W |
| 3224 | 4822 116 52298 | 680k 5% 0.5W |
| 3225 | 4822 051 30471 | 47Ω 5% 0.062W |
| 3226 | 4822 051 30101 | 100Ω 5% 0.062W |
| 3227 | 4822 051 30101 | 100Ω 5% 0.062W |
| 3228 | 4822 051 30101 | 100Ω 5% 0.062W |
| 3229 | 4822 051 30152 | 1.5Ω 5% 0.062W |
| 3230 | 4822 116 52175 | 100Ω 5% 0.5W |
| 3231 | 4822 116 52175 | 100Ω 5% 0.5W |
| 3232 | 4822 051 30562 | 5.6kΩ 5% 0.063W 0603 |
| 3233 | 4822 051 30101 | 100Ω 5% 0.062W |
| 3234 | 4822 116 52175 | 100Ω 5% 0.5W |
| 3235 | 4822 051 30102 | 1kΩ 5% 0.062W |
| 3236 | 4822 051 30101 | 100Ω 5% 0.062W |
| 3237 | 4822 051 30102 | 1kΩ 5% 0.062W |
| 3238 | 4822 051 30472 | 4.7Ω 5% 0.062W |
| 3239 | 4822 116 52263 | 2.7kΩ 5% 0.5W |
| 3240 | 4822 051 30223 | 22kΩ 5% 0.062W |
| 3241 | 4822 050 23903 | 39k 1% 0.6W |
| 3242 | 4822 117 12925 | 47kΩ 1% 0.063W 0603 |
| 3244 | 4822 051 30101 | 100Ω 5% 0.062W |
| 3247 | 4822 051 30391 | 390Ω 5% 0.062W |
| 3248 | 4822 051 30101 | 100Ω 5% 0.062W |
| 3249 | 4822 116 52175 | 100Ω 5% 0.5W |
| 3250 | 4822 051 30222 | 2.2kΩ 5% 0.062W |
| 3251 | 4822 051 30123 | 12kΩ 5% 0.1W |
| 3253 | 4822 051 30101 | 100Ω 5% 0.062W |
| 3255 | 4822 051 30101 | 100Ω 5% 0.062W |
| 3256 | 4822 051 30101 | 100Ω 5% 0.062W |
| 3257 | 4822 051 30101 | 100Ω 5% 0.062W |
| 3258 | 4822 116 52175 | 100Ω 5% 0.5W |
| 3260 | 4822 116 52175 | 100Ω 5% 0.5W |
| 3261 | 4822 051 30472 | 4.7Ω 5% 0.062W |
| 3262 | 4822 051 30101 | 100Ω 5% 0.062W |
| 3263 | 4822 051 30101 | 100Ω 5% 0.062W |
| 3265 | 4822 051 30101 | 100Ω 5% 0.062W |
| 3266 | 4822 051 30101 | 100Ω 5% 0.062W |
| 3267 | 4822 051 30101 | 100Ω 5% 0.062W |
| 3269 | 4822 051 30101 | 100Ω 5% 0.062W |
| 3270 | 4822 116 52219 | 330Ω 5% 0.5W |
| 3271 | 4822 051 30101 | 100Ω 5% 0.062W |
| 3272 | 4822 117 12968 | 820Ω 5% 0.62W |
| 3273 | 4822 051 30102 | 1kΩ 5% 0.062W |
| 3274 | 4822 116 52175 | 100Ω 5% 0.5W |
| 3275 | 4822 116 52175 | 100Ω 5% 0.5W |
| 3276 | 4822 116 52175 | 100Ω 5% 0.5W |
| 3277 | 4822 116 52175 | 100Ω 5% 0.5W |
| 3278 | 4822 116 52175 | 100Ω 5% 0.5W |
| 3279 | 4822 051 30472 | 4.7Ω 5% 0.062W |
| 3280 | 4822 051 30472 | 4.7Ω 5% 0.062W |
| 3282 | 4822 051 30472 | 4.7Ω 5% 0.062W |
| 3283 | 4822 051 30472 | 4.7Ω 5% 0.062W |
| 3284 | 4822 051 30472 | 4.7Ω 5% 0.062W |
| 3285 | 4822 051 30102 | 1kΩ 5% 0.062W |
| 3287 | 4822 051 30101 | 100Ω 5% 0.062W |
| 3289 | 4822 051 30101 | 100Ω 5% 0.062W |
| 3291 | 4822 050 11002 | 1kΩ 1% 0.4W |
| 3292 | 4822 117 12925 | 47kΩ 1% 0.063W 0603 |
| 3293 | 4822 051 30273 | 27kΩ 5% 0.062W |
| 3295 | 5322 117 13056 | 8.2kΩ 1% 0.063W 0603 |
| 3296 | 4822 051 30562 | 5.6kΩ 5% 0.063W 0603 |
| 3297 | 4822 051 30223 | 22kΩ 5% 0.062W |
| 3298 | 4822 051 30101 | 100Ω 5% 0.062W |
| 3401 | 4822 050 24703 | 47kΩ 1% 0.6W |
| 3402 | 4822 050 11002 | 1kΩ 1% 0.4W |
| 3404▲ | 4822 117 11151 | 1Ω 5% |
| 3412 | 4822 050 11002 | 1kΩ 1% 0.4W |
| 3414 | 2322 194 63109 | 10Ω 5% 2W |
| 3415 | 4822 116 52175 | 100Ω 5% 0.5W |
| 3416 | 4822 051 30479 | 47Ω 5% 0.062W |
| 3417 | 4822 053 11153 | 15kΩ 5% 2W |
| 3418 | 4822 116 52175 | 100Ω 5% 0.5W |
| 3419 | 4822 051 30682 | 6.8Ω 5% 0.062W |
| 3420 | 4822 117 10833 | 10kΩ 1% 0.1W |
| 3422▲ | 4822 117 11151 | 1Ω 5% |
| 3423▲ | 4822 117 11151 | 1Ω 5% |
| 3425 | 4822 050 21004 | 100kΩ 1% 0.6W |
| 3427 | 4822 117 11449 | 2.2kΩ 5% 0.1W 0805 |
| 3428 | 4822 051 20332 | 2.3kΩ 5% 0.1W |
| 3430 | 4822 053 20334 | 330kΩ 5% 0.25W |
| 3431 | 4822 050 28203 | 82kΩ 1% 0.6W |
| 3432 | 4822 053 11159 | 15Ω 5% 2W |
| 3433 | 4822 050 21008 | 1Ω 1% 0,6W |
| 3434 | 4822 050 21008 | 1Ω 1% 0,6W |
| 3440 | 4822 116 52226 | 560Ω 5% 0.5W |
| 3441 | 4822 053 20334 | 330kΩ 5% 0.25W |
| 3442 | 3198 013 04720 | 4.7kΩ 0.5W |
| 3443 | 3198 013 04720 | 4.7kΩ 0.5W |
| 3445 | 4822 051 20479 | 47kΩ 5% 0.1W |
| 3446 | 4822 051 30101 | 100Ω 5% 0.062W |
| 3447 | 4822 116 52269 | 3.3kΩ 5% 0.5W |
| 3451 | 4822 050 21204 | 120kΩ 1% 0,6W |
| 3452 | 4822 051 30183 | 18kΩ 5% 0.062W |
| 3453 | 4822 051 30333 | 33kΩ 5% 0.062W |
| 3454 | 4822 116 83884 | 47kΩ 5% 0.5W |
| 3456▲ | 4822 117 11151 | 1Ω 5% |
| 3458▲ | 4822 052 11478 | 4.7Ω 5% 0.5W |
| 3459▲ | 4822 117 11151 | 1Ω 5% |
| 3460 | 4822 116 52256 | 2.2kΩ 5% 0.5W |
| 3461 | 4822 116 52256 | 2.2kΩ 5% 0.5W |
| 3462 | 4822 051 30222 | 2.2kΩ 5% 0.062W |
| 3463 | 4822 051 30102 | 1kΩ 5% 0.062W |
| 3464 | 4822 051 30391 | 390Ω 5% 0.062W |
| 3465 | 4822 051 30391 | 390Ω 5% 0.062W |
| 3466▲ | 4822 052 11108 | 1Ω 5% 0.5W |
| 3467 | 4822 116 83872 | 220Ω 5% 0.5W |
| 3468 | 4822 116 83872 | 220Ω 5% 0.5W |
| 3469 | 4822 051 30102 | 1kΩ 5% 0.062W |
| 3470 | 4822 116 52186 | 22Ω 5% 0.5W |
| 3471 | 4822 050 23308 | 3.3Ω 1% 0.6W |
| 3472 | 4822 050 23908 | 3.9Ω 1% 0.6W |
| 3473 | 4822 051 30474 | 470kΩ 5% 0.062W |
| 3474 | 4822 051 30153 | 15kΩ 5% 0.062W |
| 3475 | 5322 117 13056 | 8.2kΩ 1% 0.063W 0603 |
| 3484▲ | 4822 052 10108 | 1Ω 5% 0.33W |
| 3485▲ | 4822 052 10108 | 1Ω 5% 0.33W |
| 3489 | 4822 051 20479 | 47kΩ 5% 0.1W |
| 3490 | 4822 051 30223 | 22kΩ 5% 0.062W |
| 3491 | 4822 117 12864 | 82kΩ 5% 0.6W |
| 3493 | 4822 051 30222 | 2.2kΩ 5% 0.062W |
| 3495 | 4822 051 20334 | 330kΩ 5% 0.1W |
| 3497▲ | 4822 052 11338 | 3.3Ω 5% 0,5W |
| 3498 | 4822 051 30472 | 4.7Ω 5% 0.062W |
| 3499 | 4822 051 20684 | 680kΩ 5% 0.1W |
| 3500▲ | 4822 053 21335 | 3.3MΩ 5% 0.5W |
| 3501▲ | 4822 053 21335 | 3.3MΩ 5% 0.5W |
| 3502 | 4822 116 83872 | 220Ω 5% 0.5W |
| 3503 | 4822 252 11215 | DSP301N-A21F |
| 3504▲ | 4822 053 21155 | 1.5MΩ 5% 0.5W |
| 3505▲ | 2122 550 00171 | 1mΩ 612V |
| 3506▲ | 4822 053 21335 | 3.3MΩ 5% 0.5W |
| 3507▲ | 2122 663 00021 | 9Ω 265V |
| 3510▲ | 2122 612 00055 | 4.7Ω 3W |
| 3511 | 4822 050 24708 | 4.7Ω 1% 0.6W |
| 3512 | 4822 117 11817 | 1.2kΩ 1% 0.0625W |
| 3513▲ | 4822 052 10222 | 2.2kΩ 5% 0.33W |
| 3514▲ | 4822 052 10479 | 47Ω 5% 0.33W |
| 3515 | 4822 050 11002 | 1kΩ 1% 0.4W |
| 3516 | 4822 116 83303 | 0.1Ω 2W |
| 3517 | 2322 704 63004 | 300KΩ |
| 3518 | 4822 051 30332 | 3.3Ω 5% 0.062W |
| 3519 | 4822 116 52244 | 15kΩ 5% 0.5W |
| 3520 | 4822 117 11342 | 0.33Ω 5% 2W |
| 3521 | 4822 116 52269 | 3.3kΩ 5% 0.5W |
| 3522 | 4822 051 30563 | 56kΩ 5% 0.062W |
| 3524 | 4822 117 12925 | 47kΩ 1% 0.063W 0603 |
| 3527 | 4822 117 12925 | 47kΩ 1% 0.063W 0603 |
| 3528 | 4822 051 20105 | 1MΩ 5% 0.1W |
| 3529 | 4822 053 20225 | 2.2MΩ 5% 0.25W |
| 3530 | 4822 051 30221 | 220Ω 5% 0.062W |
| 3531 | 4822 116 52234 | 100kΩ 5% 0.5W |
| 3532▲ | 4822 052 10478 | 4.7Ω 5% 0.33W |
| 3533 | 5322 117 13056 | 8.2kΩ 1% 0.063W 0603 |
| 3534 | 4822 116 52175 | 100Ω 5% 0.5W |
| 3537 | 4822 051 30222 | 2.2kΩ 5% 0.062W |
| 3538 | 4822 051 20188 | 1.8Ω 5% 0.1W |
| 3541 | 4822 117 12925 | 47kΩ 1% 0.063W 0603 |
| 3563 | 4822 116 83872 | 220Ω 5% 0.5W |
| 3565 | 4822 051 30153 | 15kΩ 5% 0.062W |
| 3571 | 4822 116 83872 | 220Ω 5% 0.5W |
| 3572 | 4822 051 30221 | 220Ω 5% 0.062W |
| 3573 | 4822 051 30153 | 15kΩ 5% 0.062W |
| 3574 | 4822 116 52245 | 150kΩ 5% 0.5W |
| 3575 | 4822 050 28203 | 82kΩ 1% 0.6W |
| 3576 | 5322 117 13026 | 4.7kΩ 1% 0.063W 0603 |
| 3577 | 4822 116 52243 | 1.5kΩ 5% 0.5W |
| 3578 | 4822 051 30471 | 47Ω 5% 0.062W |
| 3579 | 4822 051 30222 | 2.2kΩ 5% 0.062W |
| 3601 | 4822 051 30472 | 4.7Ω 5% 0.062W |
| 3604 | 4822 051 30101 | 100Ω 5% 0.062W |
| 3605 | 4822 051 30101 | 100Ω 5% 0.062W |
| 3606 | 4822 116 52291 | 56kΩ 5% 0.5W |
| 3607 | 4822 051 30103 | 10kΩ 5% 0.062W |
| 3608 | 4822 051 30273 | 27kΩ 5% 0.062W |
| 3609 | 4822 051 30331 | 330Ω 5% 0.062W |
| 3614 | 4822 051 30101 | 100Ω 5% 0.062W |
| 3616 | 4822 116 52175 | 100Ω 5% 0.5W |
| 3617 | 4822 116 52175 | 100Ω 5% 0.5W |
| 3618 | 4822 116 52175 | 100Ω 5% 0.5W |
| 3634 | 4822 051 30102 | 1kΩ 5% 0.062W |
| 3635 | 4822 117 12925 | 47kΩ 1% 0.063W 0603 |
| 3637 | 4822 051 30479 | 47Ω 5% 0.062W |
| 3639 | 4822 116 52186 | 22Ω 5% 0.5W |
| 3681 | 5322 117 13057 | 820Ω 1% 0.063W 0603 |
| 3684 | 5322 117 13036 | 1.2kΩ 1% 0.063W 0603 |
| 3685 | 4822 051 30151 | 150Ω 5% 0.062W |
| 3686 | 4822 051 30391 | 390Ω 5% 0.062W |
| 3687 | 5322 117 13046 | 1.8kΩ 1% 0.063W 0603 |
| 3690 | 4822 051 30221 | 220Ω 5% 0.062W |
| 3691 | 4822 117 11817 | 1.2kΩ 1% 0.0625W |
| 3692 | 4822 051 30272 | 2.7kΩ 5% 0.062W |
| 3693 | 4822 051 30221 | 220Ω 5% 0.062W |
| 3694 | 4822 051 30472 | 4.7Ω 5% 0.062W |
| 3701 | 4822 116 83868 | 150Ω 5% 0.5W |
| 3702 | 4822 117 12891 | 220kΩ 1% |
| 3703 | 4822 116 52257 | 22kΩ 5% 0.5W |
| 3704 | 4822 117 12925 | 47kΩ 1% 0.063W 0603 |
| 3705 | 4822 116 83868 | 150Ω 5% 0.5W |
| 3706 | 4822 117 12891 | 220kΩ 1% |
| 3707 | 4822 116 52257 | 22kΩ 5% 0.5W |
| 3708 | 4822 117 12925 | 47kΩ 1% 0.063W 0603 |
| 3709 | 4822 116 52201 | 75Ω 5% 0.5W |
| 3711 | 4822 051 30333 | 33kΩ 5% 0.062W |
| 3712 | 4822 051 30682 | 6.8Ω 5% 0.062W |
| 3713 | 4822 116 52201 | 75Ω 5% 0.5W |
| 3715 | 4822 116 52201 | 75Ω 5% 0.5W |
| 3717 | 4822 116 52201 | 75Ω 5% 0.5W |
| 3718 | 4822 116 52219 | 330Ω 5% 0.5W |
| 3719 | 4822 051 30689 | 68Ω 5% 0.063W 0603 |
| 3720 | 4822 051 30102 | 1kΩ 5% 0.062W |
| 3721 | 4822 116 52201 | 75Ω 5% 0.5W |
| 3731 | 4822 116 83868 | 150Ω 5% 0.5W |
| 3732 | 4822 117 12891 | 220kΩ 1% |
| 3733 | 4822 116 52257 | 22kΩ 5% 0.5W |
| 3734 | 4822 117 12925 | 47kΩ 1% 0.063W 0603 |
| 3735 | 4822 116 83868 | 150Ω 5% 0.5W |
| 3736 | 4822 117 12891 | 220kΩ 1% |
| 3737 | 4822 116 52257 | 22kΩ 5% 0.5W |
| 3738 | 4822 117 12925 | 47kΩ 1% 0.063W 0603 |
| 3739 | 4822 050 23303 | 33kΩ 1% 0.6W |
| 3740 | 4822 051 30682 | 6.8Ω 5% 0.062W |
| 3741 | 4822 116 52201 | 75Ω 5% 0.5W |
| 3743 | 4822 116 52199 | 68Ω 5% 0.5W |
| 3745 | 4822 116 52201 | 75Ω 5% 0.5W |
| 3751 | 4822 116 83868 | 150Ω 5% 0.5W |
| 3752 | 4822 117 12891 | 220kΩ 1% |
| 3753 | 4822 116 83868 | 150Ω 5% 0.5W |
| 3754 | 4822 117 12891 | 220kΩ 1% |
| 3758 | 4822 116 52195 | 47Ω 5% 0.5W |
| 3767 | 4822 117 11817 | 1.2kΩ 1% 0.0625W |
| 3769 | 4822 117 11817 | 1.2kΩ 1% 0.0625W |
| 3975 | 4822 053 11101 | 100Ω 5% 2W |
| 3985 | 4822 051 30563 | 56kΩ 5% 0.062W |
| 3988 | 4822 051 30103 | 10kΩ 5% 0.062W |
| 3989 | 4822 051 30109 | 10Ω 5% 0.062W |
| 3991 | 4822 051 30563 | 56kΩ 5% 0.062W |
| 3992 | 4822 051 30103 | 10kΩ 5% 0.062W |
| 3993 | 4822 051 30109 | 10Ω 5% 0.062W |
| 3994 | 4822 051 30683 | 68kΩ 5% 0.062W |
| 3995 | 4822 051 30472 | 4.7Ω 5% 0.062W |

| | | |
|---|---|---|
| 3996 | 4822 051 30681 | 680Ω 5% 0.062W |
| 3997 | 4822 117 13632 | 100kΩ 1% 0603 0.62W |
| 3998 | 4822 051 30103 | 10kΩ 5% 0.062W |
| 4000 | 4822 051 30008 | Jumper 0603 |
| 4001 | 4822 051 30008 | Jumper 0603 |
| 4002 | 4822 051 30008 | Jumper 0603 |
| 4011 | 4822 051 30008 | Jumper 0603 |
| 4013 | 4822 051 30008 | Jumper 0603 |
| 4015 | 4822 051 30008 | Jumper 0603 |
| 4209 | 4822 051 30008 | Jumper 0603 |
| 4212 | 4822 051 30008 | Jumper 0603 |
| 4214 | 4822 051 30008 | Jumper 0603 |
| 4221 | 4822 051 30008 | Jumper 0603 |
| 4222 | 4822 051 30008 | Jumper 0603 |
| 4223 | 4822 051 20008 | Jumper 0805 |
| 4226 | 4822 051 30008 | Jumper 0603 |
| 4227 | 4822 051 30008 | Jumper 0603 |
| 4240 | 4822 051 30008 | Jumper 0603 |
| 4241 | 4822 051 30008 | Jumper 0603 |
| 4437 | 4822 051 30008 | Jumper 0603 |
| 4470 | 4822 051 30008 | Jumper 0603 |
| 4471 | 4822 051 30008 | Jumper 0603 |
| 4472 | 4822 051 30008 | Jumper 0603 |
| 4473 | 4822 051 30008 | Jumper 0603 |
| 4474 | 4822 051 30008 | Jumper 0603 |
| 4492 | 4822 051 30008 | Jumper 0603 |
| 4533 | 4822 051 20008 | Jumper 0805 |
| 4534 | 4822 051 30008 | Jumper 0603 |
| 4535 | 4822 051 30008 | Jumper 0603 |
| 4537 | 4822 051 30008 | Jumper 0603 |
| 4581 | 4822 051 20008 | Jumper 0805 |
| 4602 | 4822 051 30008 | Jumper 0603 |
| 4604 | 4822 051 30008 | Jumper 0603 |
| 4610 | 4822 051 30008 | Jumper 0603 |
| 4612 | 4822 051 20008 | Jumper 0805 |
| 4620 | 4822 051 30008 | Jumper 0603 |
| 4631 | 4822 051 30008 | Jumper 0603 |
| 4635 | 4822 051 30008 | Jumper 0603 |
| 4637 | 4822 051 30008 | Jumper 0603 |
| 4642 | 4822 051 30008 | Jumper 0603 |
| 4644 | 4822 051 20008 | Jumper 0805 |
| 4645 | 4822 051 30008 | Jumper 0603 |
| 4646 | 4822 051 30008 | Jumper 0603 |
| 4648 | 4822 051 30008 | Jumper 0603 |
| 4649 | 4822 051 30008 | Jumper 0603 |
| 4691 | 4822 051 30008 | Jumper 0603 |
| 4692 | 4822 051 30008 | Jumper 0603 |
| 4694 | 4822 051 30008 | Jumper 0603 |
| 4696 | 4822 051 30008 | Jumper 0603 |
| 4730 | 4822 051 30008 | Jumper 0603 |
| 4910 | 4822 051 30008 | Jumper 0603 |
| 4914 | 4822 051 20008 | Jumper 0805 |
| 4915 | 4822 051 20008 | Jumper 0805 |
| 4916 | 4822 051 20008 | Jumper 0805 |
| 4917 | 4822 051 20008 | Jumper 0805 |
| 4921 | 4822 051 20008 | Jumper 0805 |
| 4992 | 4822 051 20008 | Jumper 0805 |

| | | |
|---|---|---|
| 5001 | 2422 549 42896 | Bead 120Ω 100MHz |
| 5002 | 3198 018 34770 | 0.47µH 10% 0805 |
| 5201 | 4822 526 10704 | Bead 100MHz |
| 5202 | 2422 549 42896 | Bead 120Ω 100MHz |
| 5203 | 2422 549 42896 | Bead 120Ω 100MHz |
| 5205 | 2422 549 42896 | Bead 120Ω 100MHz |
| 5206 | 2422 549 42896 | Bead 120Ω 100MHz |
| 5207 | 2422 549 42896 | Bead 120Ω 100MHz |
| 5208 | 4822 526 10704 | Bead 100MHz |
| 5209 | 2422 549 42896 | Bead 120Ω 100MHz |
| 5210 | 2422 549 42896 | Bead 120Ω 100MHz |
| 5211 | 2422 549 42896 | Bead 120Ω 100MHz |
| 5212 | 2422 549 42896 | Bead 120Ω 100MHz |
| 5213 | 2422 549 42896 | Bead 120Ω 100MHz |
| 5214 | 2422 549 42896 | Bead 120Ω 100MHz |
| 5215 | 2422 549 42896 | Bead 120Ω 100MHz |
| 5216 | 4822 526 10704 | Bead 100MHz |
| 5217 | 4822 157 11835 | 4,7µH 5% |
| 5295 | 4822 526 10704 | Bead 100MHz |
| 5401⚠ | 2422 536 00425 | Linearity coil 21" |
| 5402 | 2422 531 02617 | PSD12-205B B |
| 5405 | 2422 536 00846 | SC15334-00 B |
| 5408 | 4822 157 11711 | Choke coil |
| 5410 | 4822 157 11737 | 22µH 10% |
| 5500⚠ | 4822 157 10476 | DMF-2820H |
| 5501⚠ | 4822 157 11523 | Line filter 5mH/2A |
| 5511 | 4822 526 10704 | Bead 100MHz |
| 5512⚠ | 2422 531 02634 | SS42315-01 B |
| 5531⚠ | 2422 531 02631 | SS22220-03 B |
| 5551 | 4822 526 10704 | Bead 100MHz |
| 5552 | 4822 157 71401 | 27µH |
| 5561 | 4822 526 10704 | Bead 100MHz |
| 5562 | 4822 526 10704 | Bead 100MHz |
| 5602 | 4822 157 11835 | 4,7µH 5% |

| | | |
|---|---|---|
| 6001 | 4822 130 34142 | BZX79-B33 |
| 6003 | 4822 130 11397 | BAS316 |
| 6004 | 4822 130 11525 | 1SS356 |
| 6006 | 4822 130 34382 | BZX79-B8V2 |
| 6203 | 4822 130 11397 | BAS316 |
| 6204 | 9322 128 70685 | SMSS14 |
| 6205 | 9340 548 69115 | PDZ27B |
| 6207 | 4822 130 11397 | BAS316 |
| 6209 | 4822 130 80622 | BAT54 |
| 6403 | 4822 130 10871 | SBYV27-200 |
| 6404 | 9322 169 61687 | DMV1500M |
| 6406 | 9334 939 60673 | RGP10G |
| 6407 | 9322 197 45703 | BAV21WS |
| 6408 | 9322 197 45703 | BAV21WS |
| 6410 | 5322 130 31559 | BY448 |
| 6441 | 9322 150 20685 | BZX384-C68 |
| 6442 | 9322 150 20685 | BZX384-C68 |
| 6443 | 4822 130 11551 | UDZS10B |
| 6450 | 4822 130 11397 | BAS316 |
| 6451 | 4822 130 11148 | UDZ4.7B |
| 6452 | 4822 130 10871 | SBYV27-200 |
| 6453 | 9334 939 60673 | RGP10G |
| 6454 | 9334 939 60673 | RGP10G |
| 6455 | 9334 939 60673 | RGP10G |
| 6456 | 4822 130 11045 | PBYR10100 |
| 6457 | 4822 130 11397 | BAS316 |
| 6458 | 4822 130 11397 | BAS316 |
| 6459 | 9334 939 60673 | RGP10G |
| 6482 | 4822 130 11416 | PDZ6.8B |
| 6483 | 9322 197 45703 | BAV21WS |
| 6484 | 9322 197 45703 | BAV21WS |
| 6486 | 4822 130 30842 | BAV21 |
| 6488 | 4822 130 11397 | BAS316 |
| 6489 | 9340 548 71115 | PDZ33B |
| 6490 | 4822 130 11397 | BAS316 |
| 6511 | 4822 130 31607 | RGP10D |
| 6512 | 4822 130 80622 | BAT54 |
| 6514 | 4822 130 11397 | BAS316 |
| 6531 | 4822 130 11522 | UDZ15B |
| 6532 | 9322 197 45703 | BAV21WS |
| 6533 | 9322 171 80685 | BZX384-B6V8 |
| 6534 | 9322 199 75685 | BZX384-B3V9 |
| 6535 | 9965 000 01541 | SB160 |
| 6536 | 9322 198 25673 | SB180 |
| 6538 | 4822 130 11397 | BAS316 |
| 6541 | 9340 548 61115 | PDZ12B |
| 6551 | 9322 198 41687 | STTH8L06D |
| 6562 | 9322 161 78682 | SB360L-7024 |
| 6563 | 9322 161 78682 | SB360L-7024 |
| 6564 | 4822 130 11397 | BAS316 |
| 6565 | 4822 130 11551 | UDZS10B |
| 6566 | 4822 130 11397 | BAS316 |
| 6571 | 5322 130 34331 | BAV70 |
| 6572 | 9340 548 54115 | PDZ6.2B |
| 6573 | 4822 130 30862 | BZX79-B9V1 |
| 6575 | 4822 130 31878 | 1N4003G |
| 6602 | 5322 130 34337 | BAV99 |
| 6691 | 9322 050 99682 | LTL-10224WHCR |
| 6694 | 9340 548 52115 | PDZ5.1B |
| 6733 | 3198 020 55680 | BZX384-C5V6 |
| 6990 | 4822 130 11397 | BAS316 |

| | | |
|---|---|---|
| 7001 | 4822 130 63732 | MMUN2212 |
| 7003 | 5322 130 42718 | BFS20 |
| 7200 | 9352 747 92557 | TDA12020H1/N1B10 |
| 7200 | 9352 747 93557 | TDA12021H1/N1B10 |
| 7201 | 4822 130 62343 | IMX1 |
| 7202 | 4822 130 11155 | PDTC114ET |
| 7203 | 4822 130 41246 | BC327-25 |
| 7204 | 4822 130 41246 | BC327-25 |
| 7207 | 5322 130 60159 | BC846B |
| 7208 | 5322 130 60159 | BC846B |
| 7209 | 9340 547 13215 | BSH103 |
| 7210 | 9340 547 13215 | BSH103 |
| 7404 | 9340 547 13215 | BSH103 |
| 7405 | 9340 550 92127 | BU4508DX |
| 7406 | 9322 197 37676 | KTC3228Y |
| 7408 | 5322 130 60159 | BC846B |
| 7410 | 4822 130 60373 | BC856B |
| 7411 | 4822 130 60373 | BC856B |
| 7451 | 9322 195 14687 | KTD600KY |
| 7452 | 9322 197 37676 | KTC3228Y |
| 7453 | 9322 195 05687 | KTB631KY |
| 7454 | 5322 130 60159 | BC846B |
| 7455 | 4822 130 60373 | BC856B |
| 7456 | 4822 130 60373 | BC856B |
| 7482 | 3198 010 44010 | PDTA114ET |
| 7483 | 4822 130 60373 | BC856B |
| 7484 | 5322 130 60159 | BC846B |
| 7485 | 5322 130 60159 | BC846B |
| 7511 | 9352 720 43118 | TEA1506T/N1 |
| 7512 | 9322 174 27687 | FQPF7N80 |
| 7513⚠ | 8238 274 02070 | TCET1103G |
| 7514 | 5322 130 60159 | BC846B |
| 7531 | 9352 739 52112 | TEA1620P/N1 |
| 7532 | 4822 130 60373 | BC856B |
| 7541 | 4822 130 60373 | BC856B |
| 7561 | 9340 547 00215 | PDTC143ZT |
| 7571 | 4822 130 40959 | BC547B |
| 7573 | 4822 130 11155 | PDTC114ET |
| 7601 | 9322 147 25682 | M24C16-WBN6 |
| 7603 | 4822 209 16978 | LF33CV |
| 7604 | 5322 130 60159 | BC846B |
| 7605 | 4822 130 41246 | BC327-25 |
| 7606 | 5322 130 60159 | BC846B |
| 7701 | 5322 130 60159 | BC846B |
| 7702 | 5322 130 60159 | BC846B |
| 7703 | 5322 130 60159 | BC846B |
| 7705 | 9322 058 40685 | SM IMT 1A |
| 7706 | 5322 130 60159 | BC846B |
| 7707 | 5322 130 60159 | BC846B |
| 7708 | 5322 130 60159 | BC846B |
| 7709 | 5322 130 60159 | BC846B |
| 7990 | 4822 209 32641 | TDA2616Q |
| 7991 | 5322 130 60159 | BC846B |
| 7992 | 5322 130 60159 | BC846B |
| 7993 | 5322 130 60159 | BC846B |
| 7994 | 5322 130 60159 | BC846B |

## CRT Panel [B]

### Various

| | | |
|---|---|---|
| 1254⚠ | 2422 500 80086 | Soc CRT 12P Female |
| 1331 | 4822 265 41113 | 7P |
| 1351 | 4822 265 30735 | Connector 5p |
| 1361 | 4822 267 10735 | Connector 3p |

| | | |
|---|---|---|
| 2330 | 4822 121 40518 | 100nF 10% 250V |
| 2331 | 5322 126 11583 | 10nF 10% 50V 0603 |
| 2332 | 2020 558 90621 | 10nF 630V |
| 2333 | 5322 126 11578 | 1nF 10% 50V 0603 |
| 2335 | 4822 122 32542 | 47nF 10% 63V |
| 2351⚠ | 2022 031 00241 | 10µ 250V |
| 2352⚠ | 4822 126 14505 | 4.7nF 10% 2KV |
| 2363 | 4822 124 40764 | 22µF 100V |
| 2364 | 4822 121 41664 | 22nF 10% 400V |
| 2365 | 2238 916 15641 | 22nF 10% 25V 0603 |
| 2367 | 5322 121 42578 | 100nF 5% 250V |
| 2368 | 4822 121 41664 | 22nF 10% 400V |
| 2381 | 4822 124 40207 | 100µF 20% 25V |
| 2388 | 4822 126 14241 | 330pF 0603 50V |
| 2390 | 2238 586 59812 | 100nF 20% 50V 0603 |
| 2392 | 2238 586 59812 | 100nF 20% 50V 0603 |

| | | |
|---|---|---|
| 3331 | 4822 116 52175 | 100Ω 5% 0.5W |
| 3332 | 3198 013 01020 | 1kΩ 20% 0.5W |
| 3333 | 4822 116 52175 | 100Ω 5% 0.5W |
| 3334 | 3198 013 01020 | 1kΩ 20% 0.5W |
| 3335 | 4822 116 52175 | 100Ω 5% 0.5W |
| 3336 | 3198 013 01020 | 1kΩ 20% 0.5W |
| 3351⚠ | 4822 052 10101 | 100Ω 5% 0.33W |
| 3354 | 3198 013 01520 | 1.5kΩ 20% 0.5W |
| 3356 | 4822 050 21009 | 10Ω 1% 0.6W |
| 3357 | 2122 552 00004 | 1mA 18V 0603 |
| 3361 | 4822 117 11817 | 1.2kΩ 1% 0.0625W |
| 3362 | 4822 050 24708 | 4.7Ω 1% 0.6W |
| 3363 | 4822 117 12968 | 820Ω 5% 0.62W |
| 3364 | 2122 101 02091 | 2.7Ω |
| 3366 | 4822 116 52291 | 56kΩ 5% 0.5W |
| 3367 | 4822 051 30563 | 56kΩ 5% 0.062W |
| 3368 | 4822 117 12968 | 820Ω 5% 0.62W |
| 3371 | 4822 116 52175 | 100Ω 5% 0.5W |
| 3372 | 2322 750 62708 | 2.7Ω 1206 |
| 3373 | 4822 117 12473 | 4.7kΩ 5% 5W |
| 3374 | 4822 051 30181 | 180Ω 5% 0.062W |
| 3388 | 4822 051 30109 | 10Ω 5% 0.062W |
| 3389 | 5322 117 11726 | 10Ω 5% |
| 3394 | 4822 051 30221 | 220Ω 5% 0.062W |
| 3397 | 4822 051 30472 | 4.7Ω 5% 0.062W |
| 3398 | 4822 051 30221 | 220Ω 5% 0.062W |
| 4328 | 4822 051 30008 | Jumper 0603 |
| 4329 | 4822 051 30008 | Jumper 0603 |

| | | |
|---|---|---|
| 4330 | 4822 051 30008 | Jumper 0603 |
| 4336 | 4822 051 20008 | Jumper 0805 |
| 4337 | 4822 051 30008 | Jumper 0603 |
| 4362 | 4822 051 30008 | Jumper 0603 |

| | | |
|---|---|---|
| 5330 | 4822 526 10704 | Bead 100MHz |
| 5351 | 4822 157 50961 | 22µH |
| 5352 | 2422 535 94257 | 0.22 µF |

| | | |
|---|---|---|
| 6331 | 4822 130 30842 | BAV21 |
| 6332 | 4822 130 30842 | BAV21 |
| 6333 | 4822 130 30842 | BAV21 |
| 6361 | 5322 130 34337 | BAV99 |
| 6362 | 5322 130 34337 | BAV99 |
| 6363 | 5322 130 34337 | BAV99 |
| 6383 | 4822 130 31607 | RGP10D |

| | | |
|---|---|---|
| 7330 | 9352 636 45112 | TDA6108AJF/N1C |
| 7361 | 4822 130 40959 | BC547B |
| 7362 | 4822 130 44568 | BC557B |
| 7363 | 9322 166 55682 | 2SA1358 |
| 7364 | 9322 166 56682 | 2SC3421 |

## Side A/V Panel + Headphone [D]

### Various

| | | |
|---|---|---|
| 1232 | 4822 267 51391 | Connector Phone |
| 1250 | 2422 026 05538 | Soc cinch 3P |
| 1251 | 2422 026 05494 | 7P Female |
| 1252 | 2422 025 11244 | Connector 7p m |
| 1254 | 4822 267 10734 | Connector 5p |
| 1278 | 4822 267 10565 | Connector 4p |
| 1280 | 4822 267 10735 | Connector 3p |
| 1281 | 2422 025 16382 | Connector 3p m |
| 8254 | 3139 110 38861 | Cable 5p/680/5p |

| | | |
|---|---|---|
| 2171 | 4822 126 13512 | 330pF 10% 50V |
| 2172 | 4822 126 13512 | 330pF 10% 50V |
| 2173 | 4822 126 13512 | 330pF 10% 50V |
| 2174 | 4822 126 13512 | 330pF 10% 50V |
| 2175 | 4822 124 22652 | 2.2µF 20% 50V |
| 2176 | 2238 586 59812 | 100nF 20% 50V 0603 |
| 2178 | 4822 126 13881 | 470pF 5% 50V |
| 2180 | 4822 124 22652 | 2.2µF 20% 50V |

| | | |
|---|---|---|
| 3150 | 4822 116 83884 | 47kΩ 5% 0.5W |
| 3151 | 4822 116 52257 | 22kΩ 5% 0.5W |
| 3152 | 4822 116 83884 | 47kΩ 5% 0.5W |
| 3153 | 4822 116 52257 | 22kΩ 5% 0.5W |
| 3154 | 4822 116 52201 | 75Ω 5% 0.5W |
| 3156 | 4822 116 52231 | 820Ω 5% 0.5W |
| 3157 | 4822 116 52231 | 820Ω 5% 0.5W |
| 3158 | 4822 116 52201 | 75Ω 5% 0.5W |
| 3159 | 4822 116 52175 | 100Ω 5% 0.5W |
| 3160 | 4822 116 52175 | 100Ω 5% 0.5W |

## Top Control [E]

### Various

| | | |
|---|---|---|
| 1010 | 2422 025 16601 | Connector 3p m |
| 1010 | 4822 267 10748 | Connector 3p |
| 1011 | 4822 276 13775 | Switch |
| 1012 | 4822 276 13775 | Switch |
| 1013 | 4822 276 13775 | Switch |
| 1014 | 4822 276 13775 | Switch |
| 1015 | 4822 276 13775 | Switch |
| 8010▲ | 3104 311 05101 | Cable 3P 680mm |
| 8010 | 3139 131 01771 | Cable 3p 1000mm |

| | | |
|---|---|---|
| 3011 | 4822 051 30151 | 150Ω 5% 0.062W |
| 3012 | 4822 051 30391 | 390Ω 5% 0.062W |
| 3013 | 5322 117 13046 | 1.8kΩ 1% 0.063W 0603 |
| 3014 | 4822 051 30008 | Jumper 0603 |
| 3015 | 5322 117 13057 | 820Ω 1% 0.063W 0603 |
| 3016 | 4822 051 30008 | Jumper 0603 |
| 3017 | 5322 117 13046 | 1.8kΩ 1% 0.063W 0603 |
| 3018 | 5322 117 13057 | 820Ω 1% 0.063W 0603 |

## LTI/CTI Interface [H]

### Various

| | | |
|---|---|---|
| 1206 | 2422 025 11244 | Connector 7p m |
| 1212 | 2422 025 16219 | 12P Male |
| 8206 | 3139 110 39021 | Cable 7P 180mm |
| 8207 | 3104 311 07361 | Cable 7P/560/7P |
| 8207 | 3104 311 07801 | Cable 7P 400mm |
| 8280 | 3104 311 01241 | Cable 5P 400mm |
| 8280 | 4822 320 12669 | Cable 5P 280mm |
| 8361 | 3139 110 38531 | Cable 3P 180mm |
| 8682 | 3104 311 01111 | Cable 3P 400mm |

| | | |
|---|---|---|
| 2605 | 2238 586 59812 | 100nF 20% 50V 0603 |
| 2610 | 2238 586 59812 | 100nF 20% 50V 0603 |
| 2611 | 4822 124 12379 | 220µF 25V |
| 2612 | 2238 586 59812 | 100nF 20% 50V 0603 |
| 2628 | 5322 126 11582 | 6.8nF 10% 63V |
| 2630 | 2020 552 96305 | 4.7µF 20-80% 10V |
| 2631 | 3198 017 41050 | 1µF 10V 0603 |
| 2634 | 4822 126 14221 | 68pF 5% 50V 0603 NP0 |
| 2638 | 3198 017 41050 | 1µF 10V 0603 |
| 2639 | 4822 122 33761 | 22pF 5% 50V |
| 2643 | 2238 586 59812 | 100nF 20% 50V 0603 |
| 2645 | 2238 586 59812 | 100nF 20% 50V 0603 |

| | | |
|---|---|---|
| 3612 | 4822 050 11002 | 1kΩ 1% 0.4W |
| 3613 | 4822 117 13632 | 100kΩ 1% 0603 0.62W |
| 3614 | 4822 117 13632 | 100kΩ 1% 0603 0.62W |
| 3615 | 4822 117 13632 | 100kΩ 1% 0603 0.62W |
| 3616 | 4822 116 52175 | 100Ω 5% 0.5W |
| 3617 | 4822 051 30101 | 100Ω 5% 0.062W |
| 3626 | 4822 051 30102 | 1kΩ 5% 0.062W |
| 3627 | 4822 051 30222 | 2.2kΩ 5% 0.062W |
| 3628 | 4822 051 30102 | 1kΩ 5% 0.062W |
| 3630 | 4822 051 30103 | 10kΩ 5% 0.062W |
| 3631 | 4822 051 30103 | 10kΩ 5% 0.062W |
| 3632 | 4822 051 30271 | 270Ω 5% 0.062W |
| 3633 | 4822 117 11817 | 1.2kΩ 1% 0.0625W |
| 3634 | 4822 051 30102 | 1kΩ 5% 0.062W |
| 3635 | 4822 051 30101 | 100Ω 5% 0.062W |
| 3637 | 4822 051 30105 | 1MΩ 5% 0.062W |
| 3638 | 4822 051 30474 | 470kΩ 5% 0.062W |
| 3639 | 4822 051 30479 | 47Ω 5% 0.062W |
| 3640 | 4822 051 30102 | 1kΩ 5% 0.062W |
| 3641 | 4822 051 30008 | Jumper 0603 |
| 3642 | 4822 051 30102 | 1kΩ 5% 0.062W |
| 3643 | 4822 051 30683 | 68kΩ 5% 0.062W |
| 4610 | 4822 051 30008 | Jumper 0603 |
| 4633 | 4822 051 20008 | Jumper 0805 |
| 4634 | 4822 051 20008 | Jumper 0805 |
| 4640 | 4822 051 30008 | Jumper 0603 |
| 4641 | 4822 051 30008 | Jumper 0603 |
| 4642 | 4822 051 30008 | Jumper 0603 |
| 4680 | 4822 051 30008 | Jumper 0603 |
| 4690 | 4822 051 30008 | Jumper 0603 |

| | | |
|---|---|---|
| 5614 | 4822 157 10477 | 47µH |

| | | |
|---|---|---|
| 6610 | 4822 130 11397 | BAS316 |
| 6611 | 4822 130 11416 | PDZ6.8B |
| 6625 | 9322 102 64685 | UDZ2.7B |
| 6633 | 4822 130 11397 | BAS316 |
| 6635 | 4822 130 11397 | BAS316 |
| 6636 | 4822 130 11397 | BAS316 |

| | | |
|---|---|---|
| 7610 | 4822 209 17311 | TDA9178T/N1 |
| 7627 | 4822 209 73852 | PMBT2369 |
| 7630 | 5322 130 60159 | BC846B |
| 7636 | 4822 130 63732 | MMUN2212 |
| 7637 | 5322 130 60159 | BC846B |

## Front Interface [J]

### Various

| | | |
|---|---|---|
| 1211 | 2422 025 16268 | Connector 2p m |
| 1231 | 2422 128 03111 | Switch |
| 1505 | 2422 025 16268 | Connector 2p m |
| 1693 | 2422 025 10738 | Connector 6p m |
| 8505▲ | 3104 311 03011 | Cable 2p/340/2p Bk |
| 8693 | 3139 110 38940 | Cable 6P 340mm |

| | | |
|---|---|---|
| 2691 | 4822 124 12379 | 220µF 25V |
| 2698 | 5322 121 42386 | 100nF 5% 63V |

| | | |
|---|---|---|
| 3500 | 4822 053 21335 | 3.3MΩ 5% 0.5W |
| 3501 | 4822 053 21335 | 3.3MΩ 5% 0.5W |
| 3691 | 4822 116 52207 | 1.2kΩ 5% 0.5W |
| 3693 | 4822 116 83872 | 220Ω 5% 0.5W |
| 3694 | 4822 116 52283 | 4.7kΩ 5% 0.5W |

| | | |
|---|---|---|
| 6691 | 9322 050 99682 | LTL-10224WHCR |

# 11. Revision List

First release.